Installation manual
Tumble dryer

D7–135

Type N1...

Original instructions

438905963/EN
2026.09.16

Contents

1 Safety Precautions 5
1.1 Additional safety precautions for gas heated tumble dryer 7
1.2 General information 7
1.3 Commercial use only 7
1.4 Copyright 7
1.5 Ergonomics certification 7
1.6 Symbols 8
2 Technical data 9
2.1 Electric heated machines 9
2.1.1 Drawing 9
2.1.2 Technical data 10
2.1.3 Connections 10
2.2 Gas heated machines 11
2.2.1 Drawing 11
2.2.2 Technical data 12
2.2.3 Connections 12
2.3 Machines with heat pump 13
2.3.1 Drawing 13
2.3.2 Technical data 14
2.3.3 Connections 14
3 Setup 15
3.1 General 15
3.2 Unpacking 15
3.3 Recycling instruction for packaging 17
3.4 Wheels 18
3.5 Siting 18
3.6 Drain connection (only for machines with heat pump) 19
3.7 Mechanical installation 19
4 Marine installation 21
5 Evacuation system 22
5.1 Air principle 22
5.1.1 Electric- and Gas heated machines 22
5.1.2 Machines with heat pump 23
5.2 Fresh air 24
5.3 Exhaust duct 25
5.4 Shared exhaust duct 26
5.5 Exhaust dimensioning 26
5.6 Adjusting the air flow (not valid for tumble dryers with heat pump) 27
6 Electrical connection 32
6.1 Electrical installation 32
6.2 Single-phase connection 33
6.3 Three-phase connection 34
6.4 Electrical connections 35
6.5 Functions for I/O-cards 36
6.5.1 Central payment (2J) 36
6.5.2 Central payment (2J) 37
6.5.3 External coin meter/Central payment (2K) 38
6.5.4 Price reduction (2K) 39
6.6 Option 39
6.6.1 External connection 100 mA 39
7 Gas connection 40
7.1 Fasten the label 40
7.2 General 40
7.3 Gas installation 41
7.4 Table of pressure and adjustment 42
7.5 Test run 44
7.6 Converting instructions 45
7.7 Data label 46
8 Reversing the door 47
9 At first power up 53
9.1 Select language 53

Contents

9.2 Set time and date 53
9.3 Activate/Deactivate the service alarm 53
10 Function check 53
11 Disposal information 56
11.1 Appliance recyclability and disposal 56
11.1.1 Recyclability 56
11.1.2 Procedure regarding appliance disposal and component / material recovery 56
11.2 Disposal of packing 56

The manufacturer reserves the right to make changes to design and component specifications.

1 Safety Precautions

- Servicing shall be carried out only by authorized personnel.
- Only authorized spare parts, accessories and consumables shall be used.
- The machine is not to be used if industrial chemicals have been used for cleaning.
- Do not dry unwashed items in the machine.
- WARNING: Items that have been soiled with substances such as hair care products, cooking oil, acetone, alcohol, petrol, kerosene, spot removers, turpentine, waxes and wax removers shall be cleaned sufficiently to remove the contaminant before being tumble dried. When washing such soiled items ensure the use of detergent as specified by the detergent manufacturer and select the highest suitable temperature. If in doubt, wash the items several times.
- Items such as foam rubber (latex foam), shower caps, waterproof textiles, rubber backed articles and clothes or pillows fitted with foam rubber pads should not be dried in the machine.
- Fabric softeners or similar products should be used as specified by the fabric softener instructions.
- The final part of a drying cycle occurs without heat (cool down cycle) to ensure that the items are left at a temperature that ensures that the items will not be damaged.
- Remove all objects from pockets such as lighters and matches.
- WARNING. Never stop the machine before the end of the drying cycle unless all items are quickly removed and spread out so that the heat is dissipated.
- Adequate ventilation has to be provided to avoid the back flow of gases into the room for appliances burning other fuels, including open fires.
- Exhaust air must not be discharged into a flue which is used for exhausting fumes from appliances burning gas or other fuels.
- The machine must not be installed behind a lockable door, a sliding door or a door with a hinge on the opposite side to that of the machine in such a way that a full opening of the machine is restricted.
- If the machine has a lint trap this has to be cleaned frequently.
- The lint must not be accumulated around the machine.
- DO NOT MODIFY THIS APPLIANCE.
- When performing service or replacing parts, the power must be disconnected.
- When the power is disconnected, the operator must see that the machine is disconnected (that the plug is removed and remains removed) from any point to which he has access. If this is not possible, due to the construction or installation of the machine, a disconnection with a locking system in the isolated position shall be provided.
- In accordance with the wiring rules: mount a multi-pole switch prior to the machine to facilitate installation and service operations.
- WARNING: The appliance must not be supplied through an external switching device, such as a timer, or connected to a circuit that is regularly switched on and off by a utility.
- If different rated voltages or different rated frequencies (separated by a /) are stated at the machine data plate, instructions for adjusting the appliance for operation at the required rated voltage or rated frequency are stated in the installation manual.
- Stationary appliances not fitted with means for disconnection from the supply mains having a contact separation in all poles that provide full disconnection under

overvoltage category III, means for disconnection must be incorporated in the fixed wiring in accordance with the wiring rules.

- The openings in the base, shall not be obstructed by a carpet.
- Oil-affected items can ignite spontaneously, especially when exposed to heat sources such as in a tumble dryer. The items become warm, causing an oxidation reaction in the oil. Oxidation creates heat. If the heat cannot escape, the items can become hot enough to catch fire. Piling, stacking or storing oil-affected items can prevent heat from escaping and so create a fire hazard.
- Maximum mass of dry cloth: 8.0 kg (for gas heated tumble dryers).
- Maximum mass of dry cloth: 9.0 kg (for heat pump and electric heated tumble dryers).
- A-weighted emission sound pressure level at working stations: 70 dB(A).
- Additional requirements for the following countries; AT, BE, BG, HR, CY, CZ, DK, EE, FI, FR, DE, GR, HU, IS, IE, IT, LV, LT, LU, MT, NL, NO, PL, PT, RO, SK, SI, ES, SE, CH, TR, UK:
  - The appliance can be used in public areas.
  - This appliance can be used by children aged from 8 years and above and persons with reduced physical, sensory or mental capabilities or lack of experience and knowledge if they have been given supervision or instruction concerning use of the appliance in a safe way and understand the hazards involved. Children shall not play with the appliance. Cleaning and user maintenance shall not be made by children without supervision.
  - Children of less than 3 years should be kept away unless continuously supervised.
- Additional requirements for other countries:
  - This appliance is not intended for use by persons (including children) with reduced physical, sensory or mental capabilities, or lack of experience and knowledge, unless they have been given supervision or instruction concerning use of the appliance by a person responsible for their safety. Children should be supervised to ensure that they do not play with the appliance.

1.1 Additional safety precautions for gas heated tumble dryer

- Before installation, check that the local distribution conditions, nature of gas and pressure and the adjustment of the appliance are compatible.
- The machine is not to be installed in rooms containing cleaning machines with perchloroethylene, TRICHLOROETHYLENE or CHLOROFLUOROCONTAINING HYDROCARBONS as cleaning agents.
- NOTE: it is pointed out that the connection and commissioning of appliances complying with this standard are subject to observance of the installation regulations in force in the countries where these appliances are marketed.
- Connection to the appliance shall be made with a flexible hose suitable for the appliance category in accordance with national installation regulations of the country of destination and that in case of doubt the installer shall contact the supplier.
- The appliance should be installed on non-flammable materials for the floor, worktop and/or wall close to the appliance if required.
- If you can smell gas:
  - Do not switch on any equipment
  - Do not use electrical switches
  - Do not use telephones in the building
  - Evacuate the room, building or area
  - Contact the person responsible for the machine

1.2 General information

Conditions for storage and transportation of the appliance should fulfil a temperature between -20°C / + 70°C and max Humidity of 95% RH.

In order to prevent damage to the electronics (and other parts) that may occur as the result of condensation, the machine should be placed in room temperature for 24 hours before being used for the first time.

Electric power supply should follow:

- Max range for each country rated voltage: -15% / +10%.
- Max range for each country rated frequency: ± 3 Hz.
- Dips/Interruption: 5 Dips/day (100% voltage lost, with 3-4 minutes duration).

A stable power supply is always the best. Fluctuations gives stress and additional load on all electric and electronic components.

1.3 Commercial use only

The machine/machines covered by this manual is/are made for commercial and industrial use only.

1.4 Copyright

This manual is intended solely for consultation by the operator and can only be given to third parties with the permission of Wascomat company.

1.5 Ergonomics certification

The human body is designed for movement and activity but physical stress injuries as a result of static and repetitive movements or unfavorable working postures may occur.

The ergonomic features of your product, the ones which may influence your physical and cognitive interaction with it, have been assessed and certified.

A product which exhibits ergonomic features, in fact, shall fulfil specific ergonomic requirements, belonging to three different areas: Polytechnic, Biomedical and Psychosocial (usability and satisfaction).

For each of these areas, specific tests with real users have been performed. The product was therefore compliant with the ergonomic acceptability criteria requested by the standards.

In case several machines are managed by the same operator the repetitive movements will increase and as a consequence of this the related biomechanical risk will increase exponentially.

The possible postural risks are the interaction with the door handle both in case the machine is placed directly on the floor without a base and in case the machine is placed on top of a washing machine.

Follow the below recommendations to avoid, as much as possible, operators acquiring bodily injury.

- Place the machine on a base instead of directly on the floor so that the operator does not need to bend his/her back unnecessarily when loading and unloading.
  Minimum suggested height of bases is 300 mm.
- Move the control panel to the lower position in case the machine is placed on top of a washing machine.
- Make sure there are suitable trolleys or baskets for loading, unloading and transportation.
- Organize job rotation in the working place in the case several machines are managed by the same operator.

1.6 Symbols

	Caution
	Caution, hot surface
	Caution, high voltage
	Warning, risk of fire / flammable material
	Danger, crush hazard
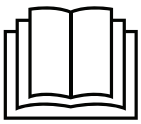	Read the instructions before using the machine

2 Technical data

2.1 Electric heated machines

2.1.1 Drawing

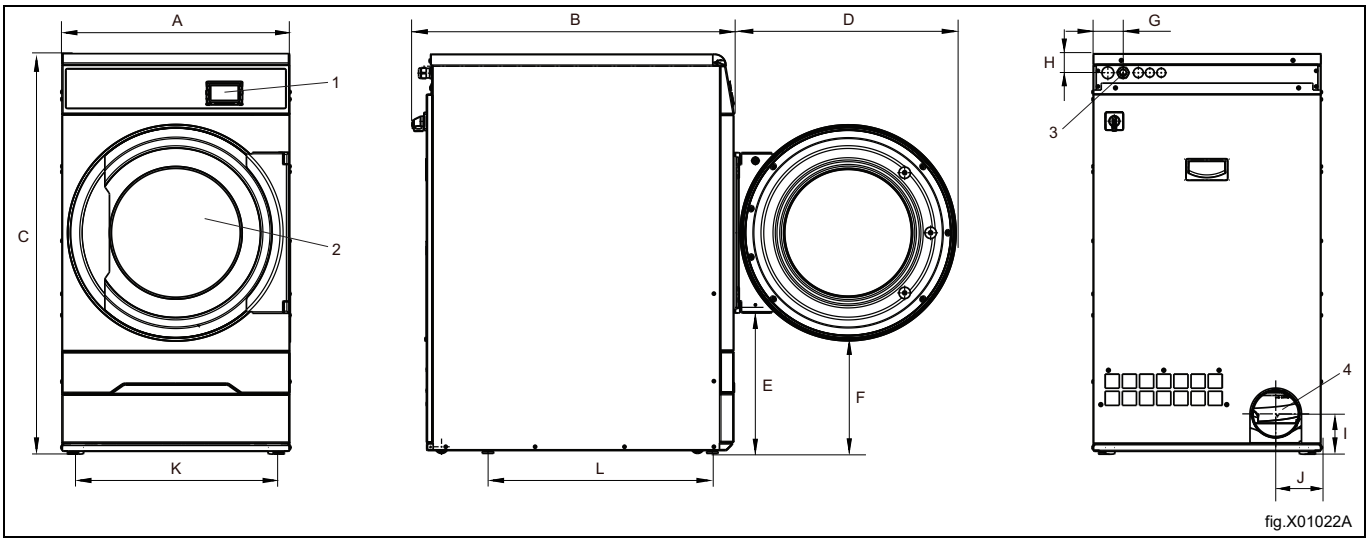

1	Operating panel
2	Door opening, ⌀ 392 mm
3	Electrical connection
4	Exhaust connection

	A	B	C	D	E
mm	600	845	1050	580	385

	F	G	H	I	J
mm	295	80	50	100	120

	K	L
mm	540	590

2.1.2 Technical data

Weight, net	kg	97
Drum volume	liters	135
Drum diameter	mm	575
Drum depth	mm	500
Drum speed, medium load	rpm	53
Rated capacity, filling factor 1:15 (Max. load)	kg	9.0
Rated capacity, filling factor 1:18	kg	7.5
Rated capacity, filling factor 1:22 (Recommended load)	kg	6.1
Heating: Electricity	kW	3.0
	kW	4.5
	kW	6.0
Optimum air flow, 3.0/4.5 kW	m^3/h	130
Optimum air flow, 6.0 kW	m^3/h	155
Optimum static back pressure, 3.0/4.5 kW	Pa	350
Maximum static back pressure, 3.0/4.5 kW	Pa	355
Optimum static back pressure, 6.0 kW	Pa	300
Maximum static back pressure, 6.0 kW	Pa	310
Sound power/pressure level at drying*	dB(A)	63/48
Heat emission of installed power, max	%	15

* Sound power levels measured according to ISO 60704.

2.1.3 Connections

Air outlet	⌀ mm	125

2.2 Gas heated machines

2.2.1 Drawing

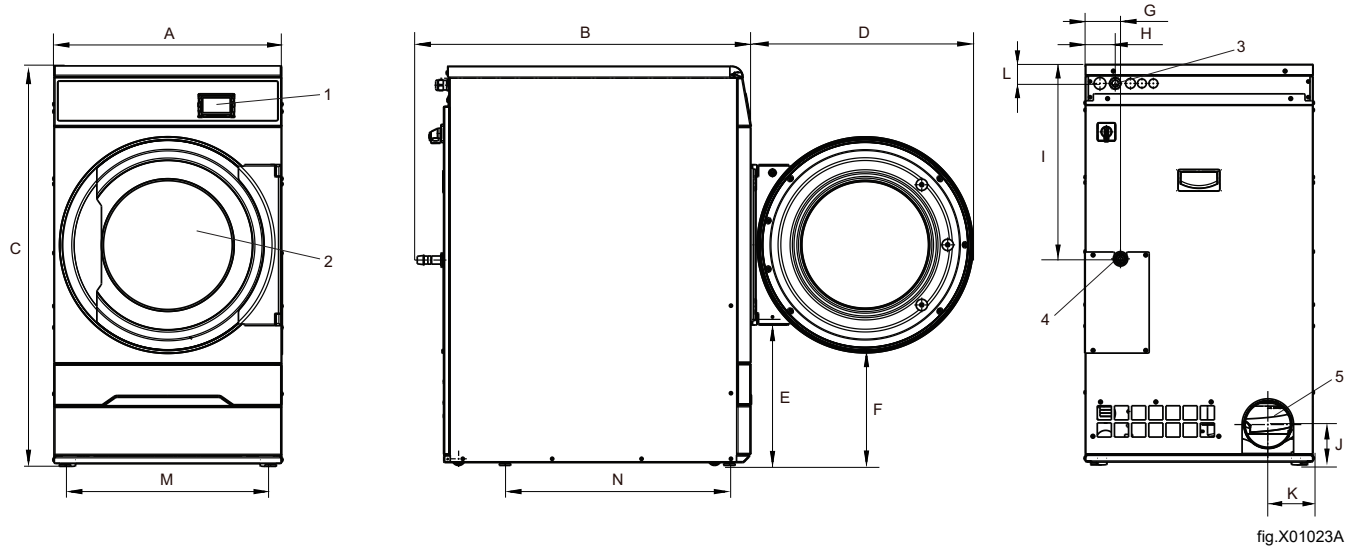

fig.X01023A

1	Operating panel
2	Door opening, ⌀ 392 mm
3	Electrical connection
4	Gas connection
5	Exhaust connection

	A	B	C	D	E
mm	600	875	1050	580	385

	F	G	H	I	J
mm	295	90	80	520	100

	K	L	M	N
mm	120	50	540	590

2.2.2 Technical data

Weight, net	kg	97
Drum volume	liters	135
Drum diameter	mm	575
Drum depth	mm	500
Drum speed, medium load	rpm	53
Rated capacity, filling factor 1:18 (Max. load)	kg	7.5
Rated capacity, filling factor 1:22 (Recommended load)	kg	6.1
Heating: Gas	kW	7.0
Optimum air flow	m^3/h	280
Optimum static back pressure	Pa	200
Maximum static back pressure	Pa	255
Sound power/pressure level at drying*	dB(A)	63/48
Heat emission of installed power, max	%	15

* Sound power levels measured according to ISO 60704.

Note!

The default gas appliances are built to run on either GNH or LPG gas where shall be installed at not over than 610 m (2001 ft) high altitude otherwise a kit for high altitude must be installed to the machine.
For the kit No. please refer to the spare parts list.

2.2.3 Connections

Air outlet	⌀ mm	125
Gas connection	1/2”	ISO 7/1–R1/2

2.3 Machines with heat pump

2.3.1 Drawing

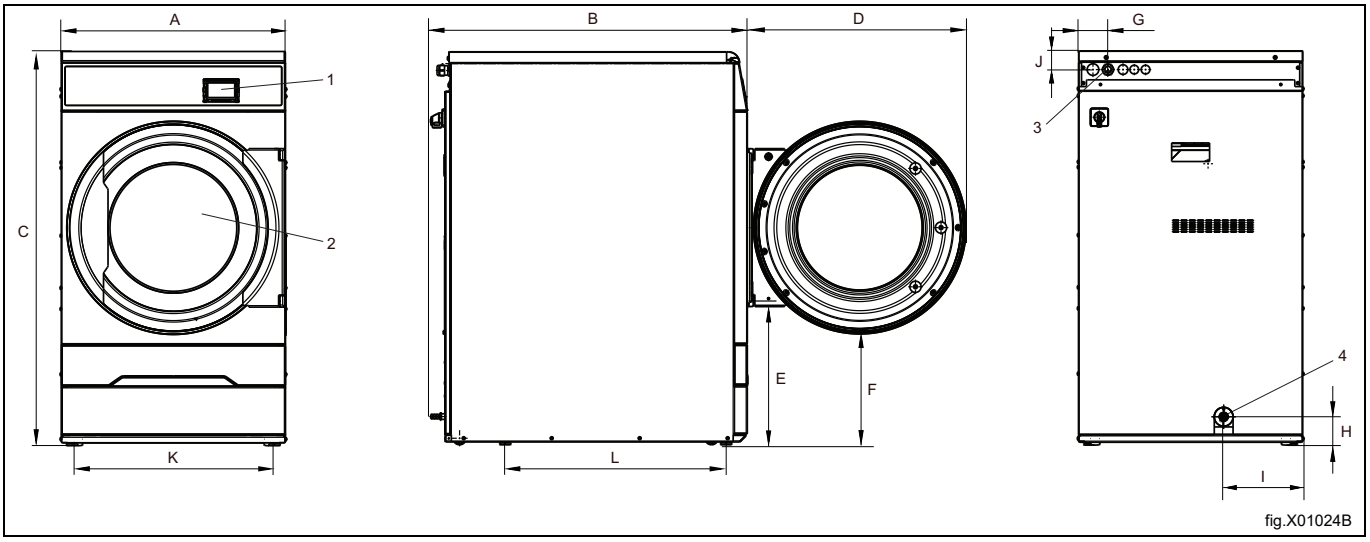

1	Operating panel
2	Door opening, ⌀ 392 mm
3	Electrical connection
4	Drain for condense water

	A	B	C	D	E
mm	600	845	1050	580	385

	F	G	H	I	J
mm	295	80	75	210	50

	K	L
mm	540	590

2.3.2 Technical data

Weight, net	kg	119
Drum volume	liters	135
Drum diameter	mm	575
Drum depth	mm	500
Drum speed, medium load	rpm	53
Rated capacity, filling factor 1:15 (Max. load)	kg	9.0
Rated capacity, filling factor 1:18	kg	7.5
Rated capacity, filling factor 1:22 (Recommended load)	kg	6.1
Sound power/pressure level at drying*	dB(A)	63/48
Average heat emission per drying cycle used to assess ventilation need**	kW	0.7
Ambient operating temperature	℃	+10 – +45

* Sound power levels measured according to ISO 60704.

** For assistance with dimensioning necessary ventilation needs, contact authorized ventilation technician. For sufficient ventilation all sources introducing heat need to be taken into account plus all other parameters effecting the ventilation need. Climate zone, building parameters, room size, etc.

2.3.3 Connections

Pipe connection, condensed water	⌀ mm	15

Heat pump

Type of refrigerant		R134a
Amount of refrigerant	kg	0.68

Fluorinated greenhouse gases

This product contains fluorinated greenhouse gases:

R134a: 0.680 kg

GWP 1430

CO_2 equivalent 0.9724 t

Hermetically sealed

3 Setup

3.1 General

The principle work flow to setup or install this machine can be simply described below.

Gas-, Electric-, Steam heating:

1. Unpacking
2. Positioning/siting, levelling or/and securing the machine.
3. Correcting the fresh air/air intake's size, exhaust duct's size and pipe(s) connections in considering a stand-alone machine or sharing exhaust duct.
4. Electric connections, connect the power supply to the machine.
5. Air flow or static back pressure adjustments in a cold empty machine in considering a stand-alone machine or sharing exhaust duct.
6. Gas connection, gas converting, high altitude kit installation. (For gas heated machine).
7. Function check.
8. Option functions check.

More details are described in each part of this installation manual.

Heat pump heating:

1. Unpacking
2. Positioning/siting, levelling or/and securing the machine.
3. Correcting the fresh air to compensate the heat emission of machine(s) and connect the drain(s).
4. Electric connections, connect the power supply to the machine.
5. Function check.
6. Option functions check.

More details are described in each part of this installation manual.

3.2 Unpacking

Note!

For machines with heat pump; the machine must not be laid down or tilted more than 45°. If so, this might damage the heat pump.

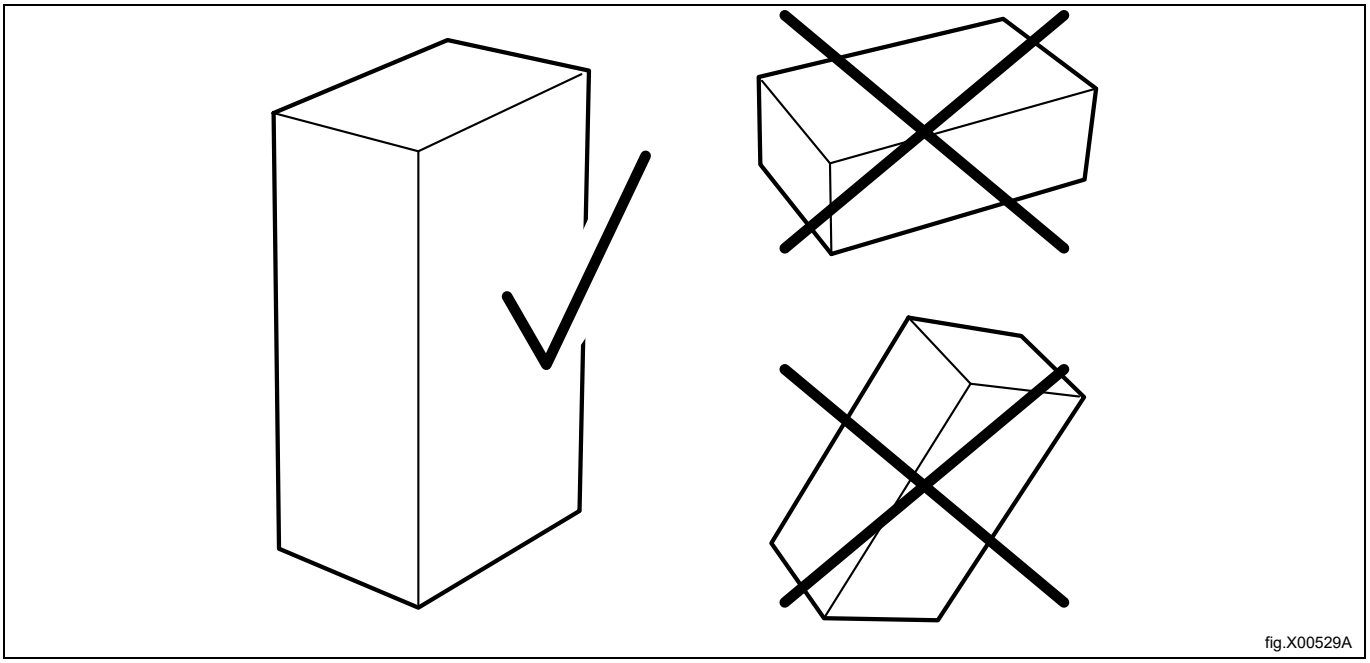

fig.X00529A

Remove the screws and the transportation bracket on each side of the machine.
Remove the machine from the pallet.

Note!
When moving the machine, handle it with care. The drum has no transport clamps.

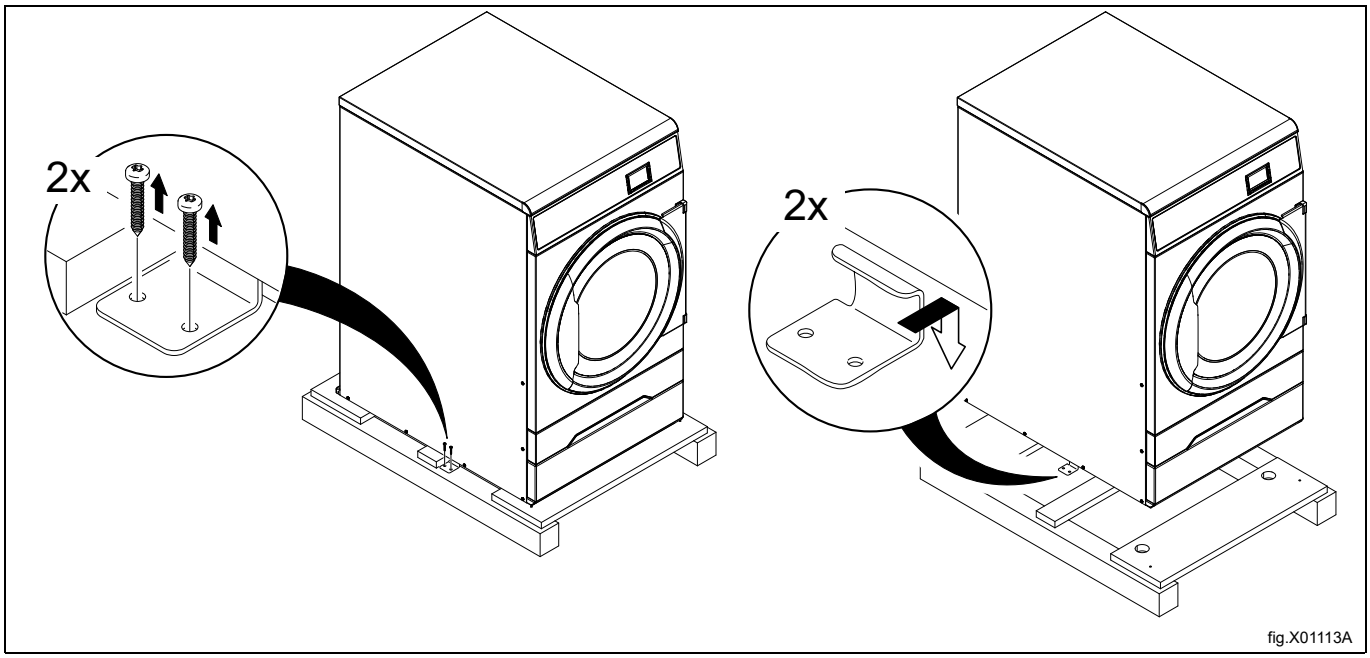

Place the machine on its final position.

3.3 Recycling instruction for packaging

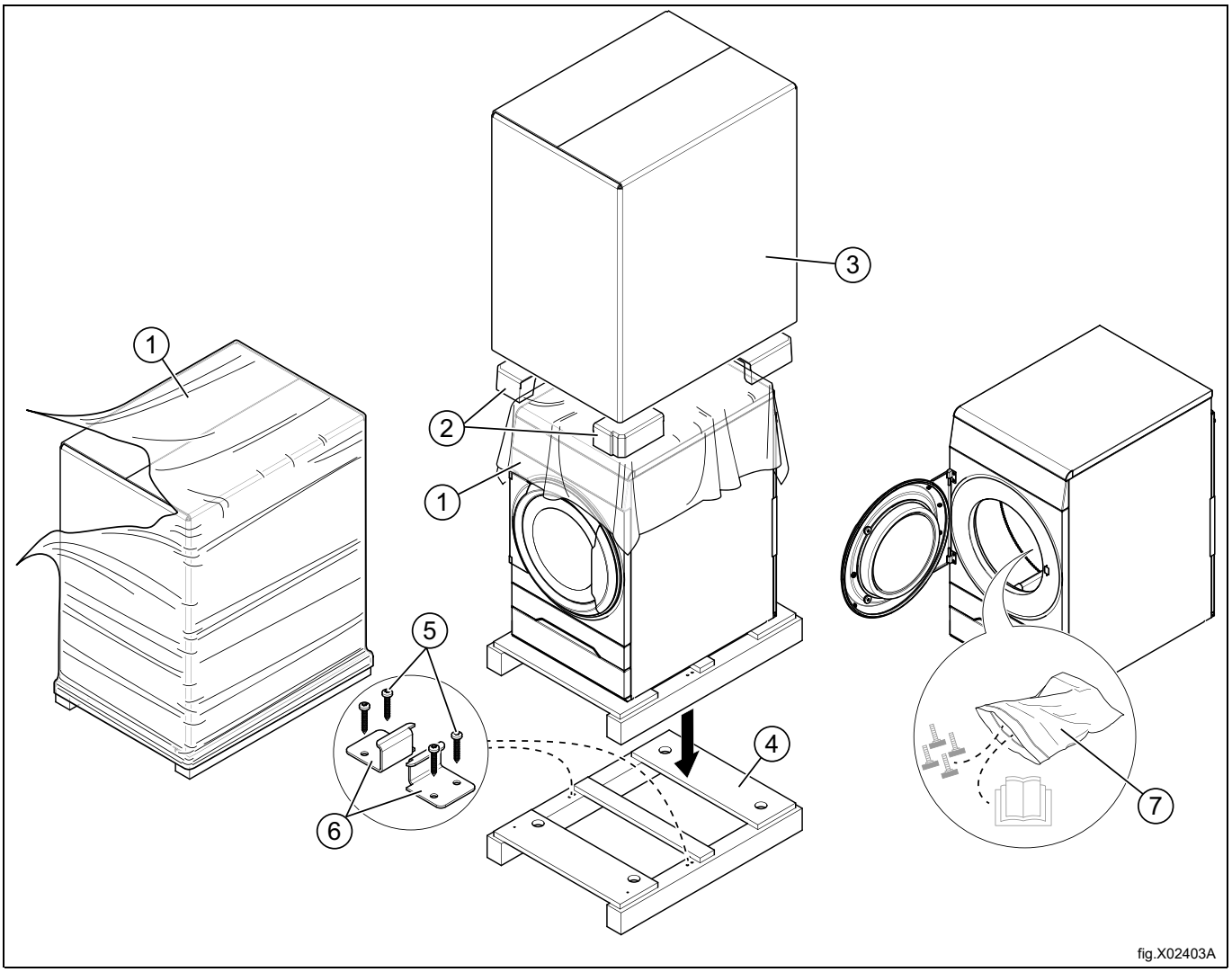

Fig.	Description	Code	Type
1	Wrapping film	LDPE 4	Plastics
2	Corner protection	PS 6	Plastics
3	Cardboard packaging	PAP 20	Paper
4	Pallet	FOR 50	Wood
5	Screw	FE 40	Steel
6	Steel Bracket	FE 40	Steel
7	Plastic bag	PET 1	Plastics

3.4 Wheels

For ergonomic reasons the machine is equipped with wheels.
The wheels makes it easy to move the machine without lifting it.
The wheels can only be used as long as the feet of the machine is not lowered.

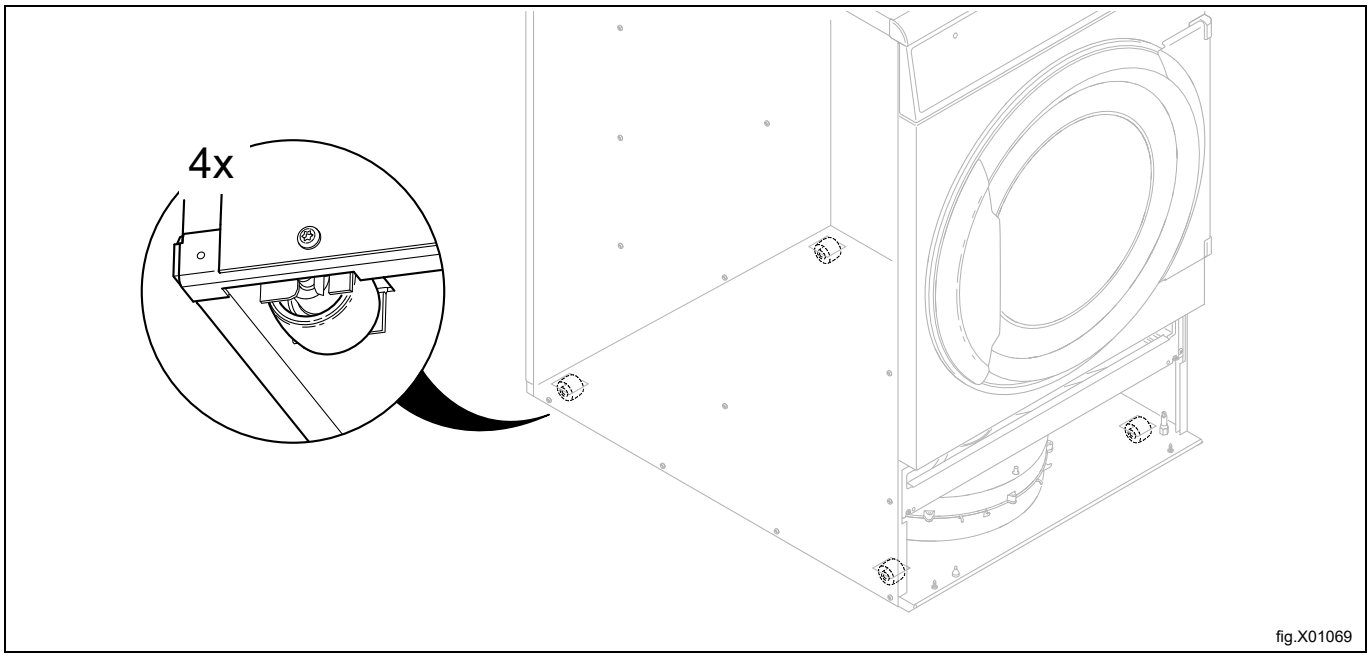

fig.X01069

3.5 Siting

The figure shows recommended distance to walls and/or other machines.

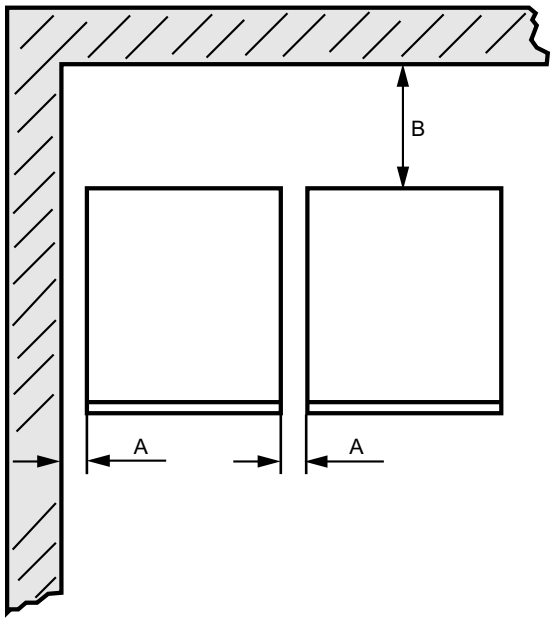

fig.X00959

A	5–500 mm (Min. 5 mm)
B	500 mm (Min. 200 mm)

Note!

The machine should be positioned so that there will be enough space for working, both for the user and service personnel.

Respecting the given recommendations will provide easy access for maintenance and service operations.

In case of space limitations, it is possible to install machines without respecting to the given recommendations. If so, keep in mind that it might be necessary to disconnect and move other machines to be able to reach and perform service on affected machine.

3.6 Drain connection (only for machines with heat pump)

Connect a drain hose to the pipe (A) on the heat pump unit.

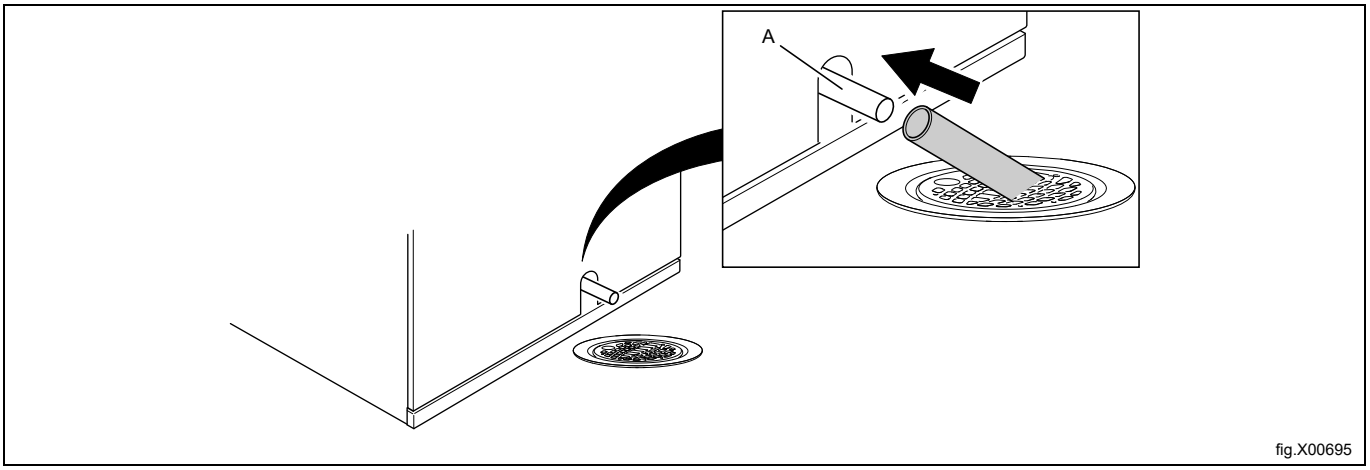

fig.X00695

Note!

The drain hose (A) must be positioned over the water level in the floor drain.
The drain must be lower than the drain outlet from the heat pump unit. If not the water will flow back into the machine. Adjust with the feet.
The hose shall hang in a gentle arc.

3.7 Mechanical installation

Remove the filter drawer.

Loosen the five screws and demount the bracket.

Remove the lower front panel.

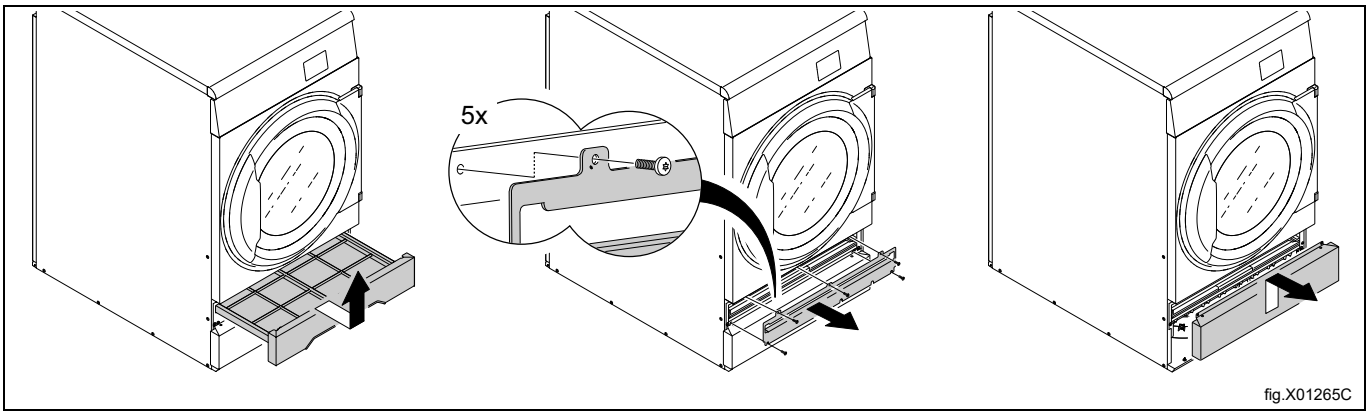

fig.X01265C

Level the machine with the feet of the machine. The maximum height adjustment of the feet is 14 mm.

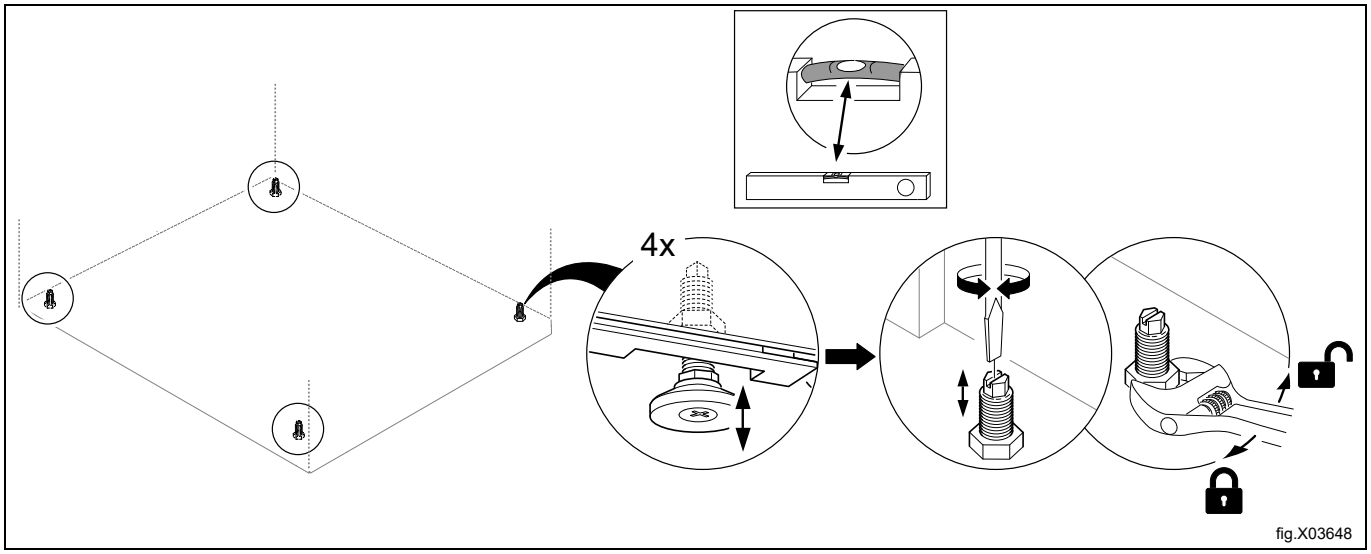

Remount the panels.

4 Marine installation

To ensure steadiness of the machine it is important to fasten the machine to the foundation.

Fasten four fittings to the foundation using four x M10 set screws.

Note!

The four fittings are not supplied with the machine and must be ordered as kit No. 487193544.

Fasten the machine to the fittings.

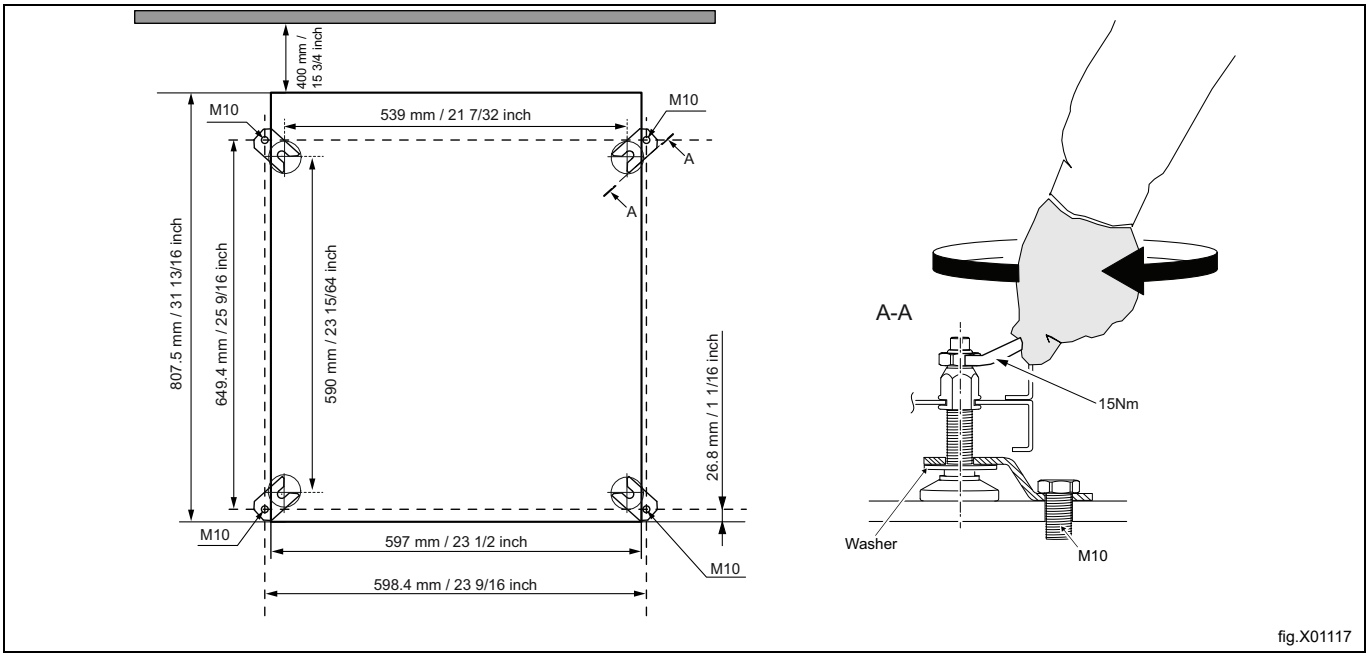

Note!

Marine installation is not applicable for gas heated machines or machines with heat pump.

5 Evacuation system

5.1 Air principle

Note!
It is very important that the machine gets enough fresh air in order to get the best drying result.

5.1.1 Electric- and Gas heated machines

The fan creates low pressure in the machine, drawing air into the drum via the heating unit. The heated air passes through the garments and the drum holes and flows out through the filter positioned below the drum. The air is then evacuated through the fan and exhaust system.

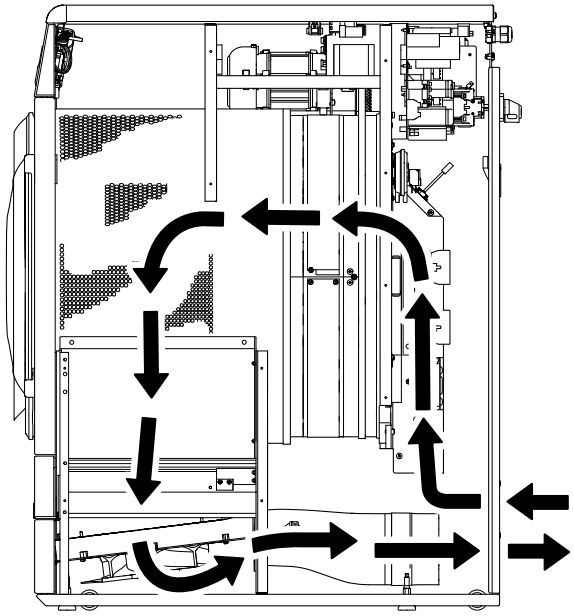

fig.X01075A

5.1.2 Machines with heat pump

The fan creates air flow in the machine, drawing air into the drum via the heating unit. The heated air passes through the garments and the drum holes and flows out through the first filter drawer and continues through the second special filter just underneath. The special filter is necessary in machines with heat pump in order to protect the heat pump to get clogged by lint. When the air has passed the two filters it recirculates back into the drum.

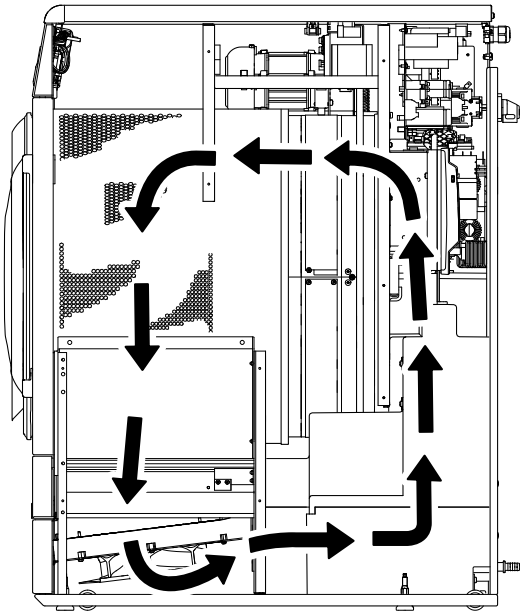

fig.X01077A

Ventilating the room

When the machine is in operation, the room temperature increases. Due to this, the room must have sufficient ventilation.

All sources introducing heat into the same room requires to be considered when dimensioning the ventilation. Heat sources could for example be: more tumble dryers, drying cabinets, washers, ironers, radiators, etc. The combination of several sources for heat introduction leads to an increased need for ventilation flow. Other factors may also influence the needed ventilation flow, such as climate zone, building parameters, room size, etc. For assistance with dimensioning necessary ventilation needs, contact authorized ventilation technician.

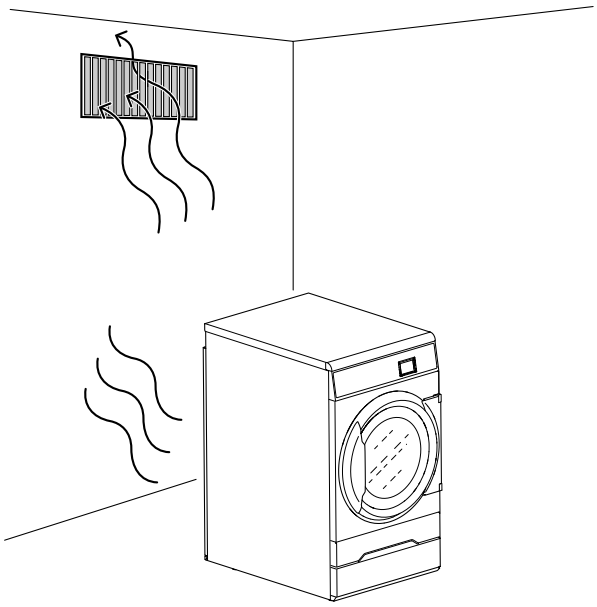

fig.X03462C

5.2 Fresh air

For maximum efficiency and the shortest possible drying time, it is important to ensure that fresh air is able to enter the room from the outside in the same volume as that is blown out of the room

To avoid draught in the room it is important to place the air inlet behind the machine.

Provisions for adequate air supply:

- The area of the air inlet opening is recommended to be five times the size of the exhaust pipe area. The area of the inlet opening is the area through which the air can flow without resistance from the grating/slatted cover.

The resistance in the grating/slats on the air inlet cover panel should not exceed 10 Pa (0.1 mbar).

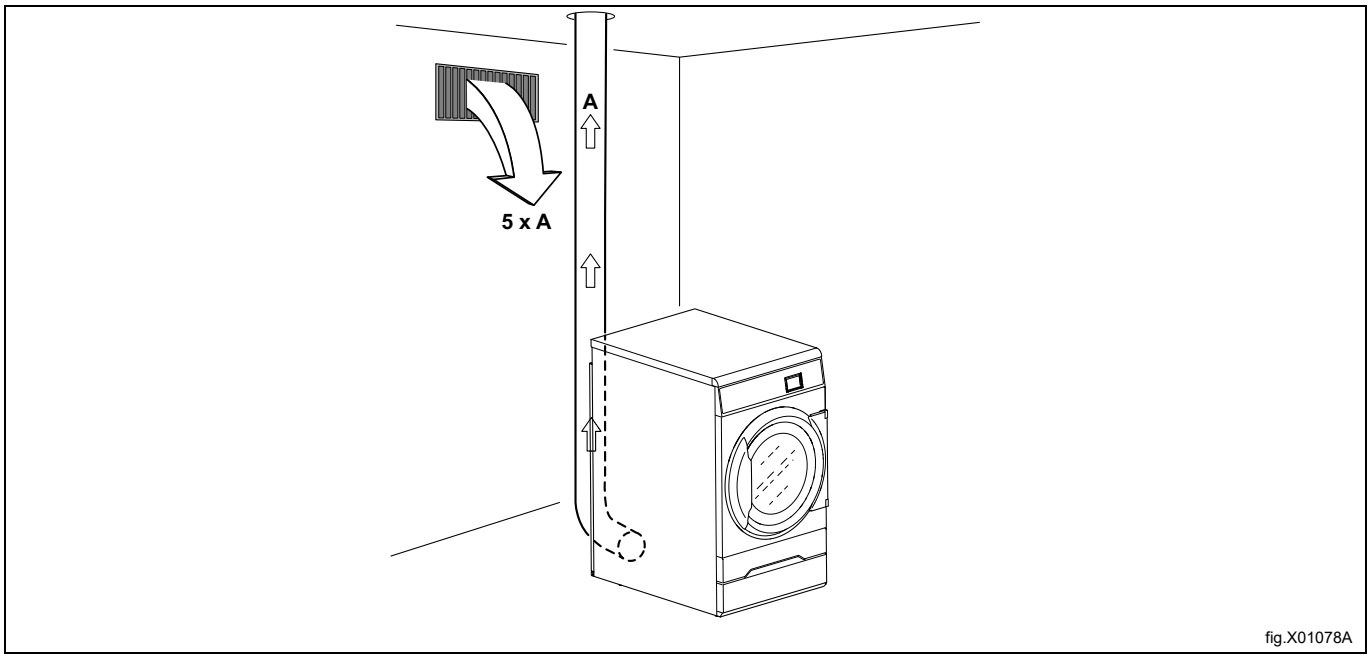

fig.X01078A

Note!
Gratings/slatted covers often block half of the total fresh air vent area. Remember to take this into account.

5.3 Exhaust duct

- Only rigid or flexible metal duct should be used for exhausting.
- Plastic ducting is not to be used.
- Recommended materials for exhaust is stainless steel or other high temperature resistant materials.
- The duct is not to be assembled with screws or other fastening means that extend into the duct and catch lint, instead use for example clamps and high temperature silicone.
- The exhaust air should not be vented into a wall, a ceiling, or a concealed space of building.
- The exhaust duct must lead clear of the building as condensation may cause frost damage to the building.
- The exhaust duct must lead to the outdoors.
- The exhaust duct must be placed in such a way that it is protected on the outside from for example impacts or water ingress.
- The exhaust duct must be smooth on the inside (low air resistance).
- The exhaust duct must have gentle bends.

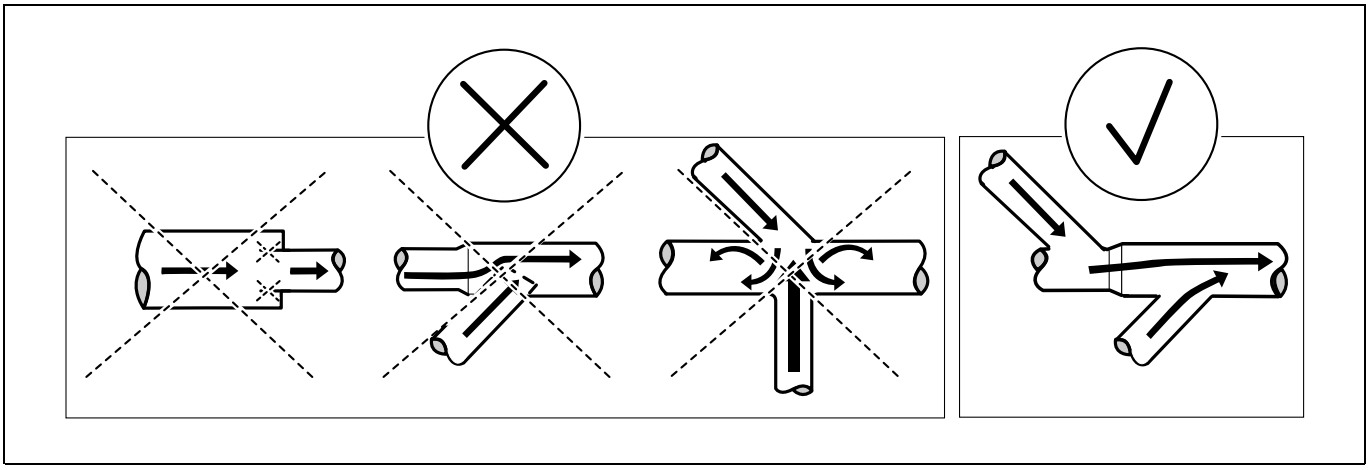

5.4 Shared exhaust duct

It is recommended that each machine is connected to a separate exhaust duct.

When several machines shall use the same exhaust duct the exhaust duct must increase after each machine. The recommended diameter increase progression is the one in the table.

If several machines are installed on the same exhaust pipe, it is recommended to adjust the airflow on the machines when all machines are started and running a program with no heat.

Please consider that unnecessarily large ducts create issues with the draught.

The exhaust duct must have a nonreturn flap after each dryer.

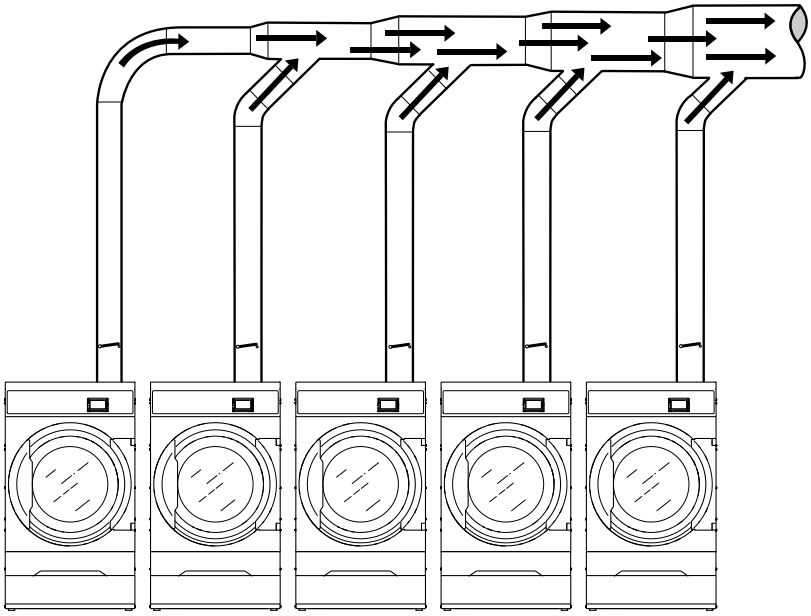

fig.X01079A

The exhaust duct diameter must not be reduced.

5.5 Exhaust dimensioning

It is important that the machine has correct air volume compared to each machines power.

If the air flow is smaller or larger this will result in a longer drying period.

If the outlet pipe is long or the ventilation is not properly designed we recommend to clean the outlet pipes periodically. Usually, longer ducts need more frequent cleaning.

The exhaust pipes shall be short in order for the machine to work in the best way.

All cover panels must be mounted in order for the machine to work in the best way.

5.6 Adjusting the air flow (not valid for tumble dryers with heat pump)

Adjusting the air flow may only be carried out by authorized personnel.

Note!

For airflow adjustment ability, a damper need to be incorporated into the exhaust piping system.

It is important that the machine has the correct air flow compared to each machines heat input. If the air flow is below the minimum, the machine will be forced to switch the heating off which will result in longer drying time.

An air flow above needed is unnecessary and can result in a cold laundry room and noise from the piping and outlet. In extreme causes this can result in longer drying time.

- Demount the rear panel.

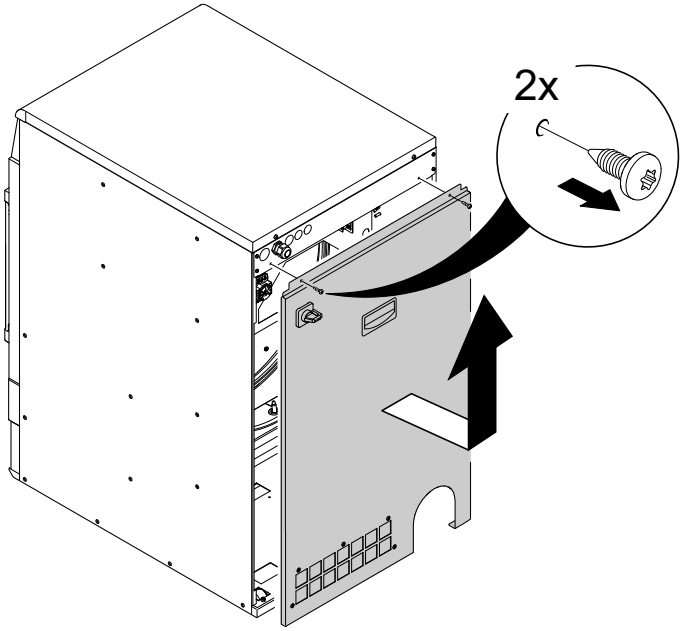

fig.X01344B

Insert the measuring instrument (manometer) in the hole (A). Make sure the connection is tight to prevent air leakage.

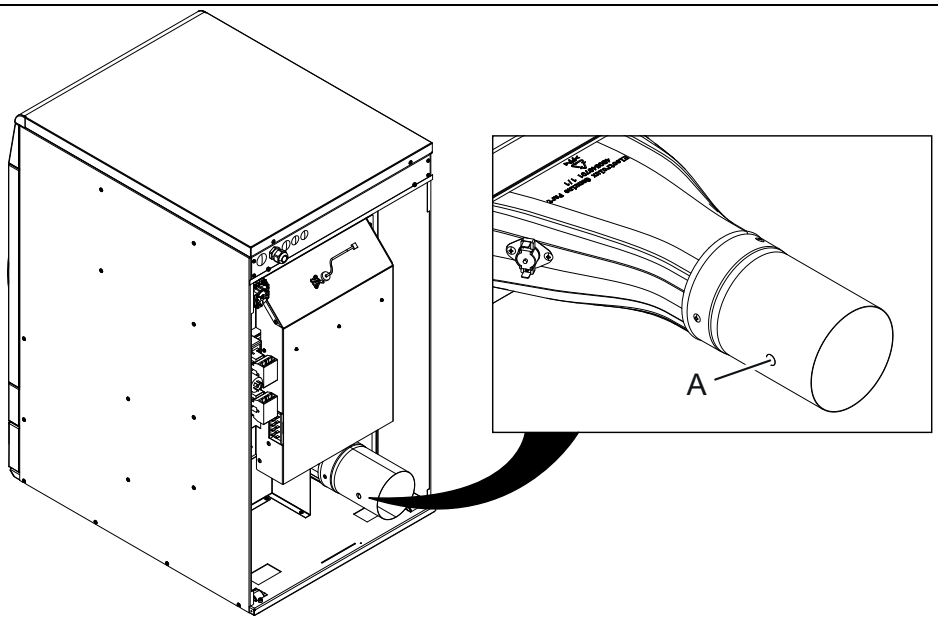

fig.X01750

Measure when the machine is running with a program without heat and with an empty drum.

To be able to adjust the air flow for an optimal drying process it is recommended to install a damper in the ducting system. By opening and closing the damper the pressure in the hole (A) is either lowered or raised, thus the flow is raised or lowered.

Diagram with pressure drop curve

The grey area (A) illustrates the optimal working area.

A	Working area
B	Optimum airflow cold empty machine
C	Static back pressure, Pa
D	Air flow m³/h

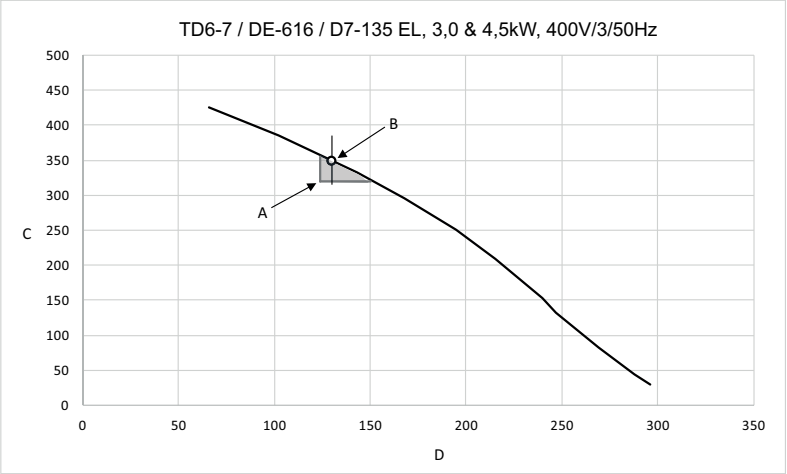

fig.X01554A

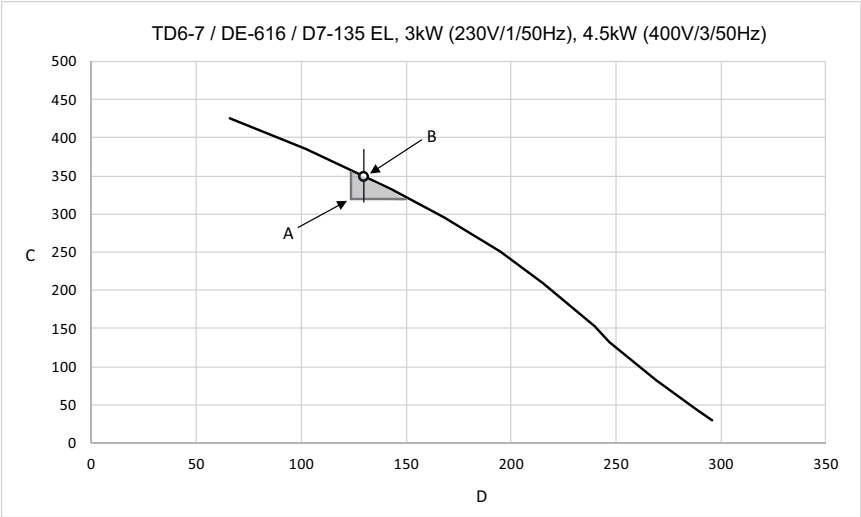

fig.X01555A

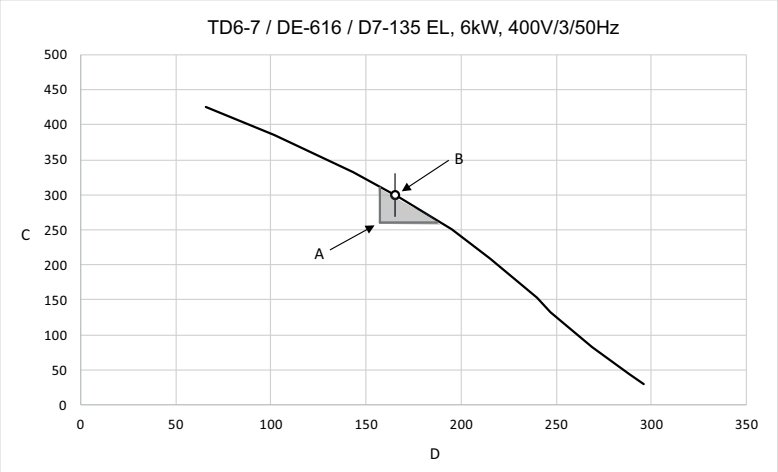

fig.X01556A

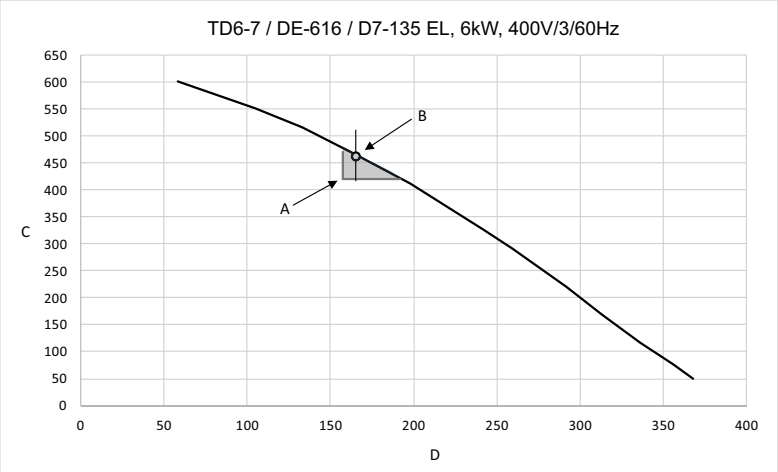

fig.X01557A

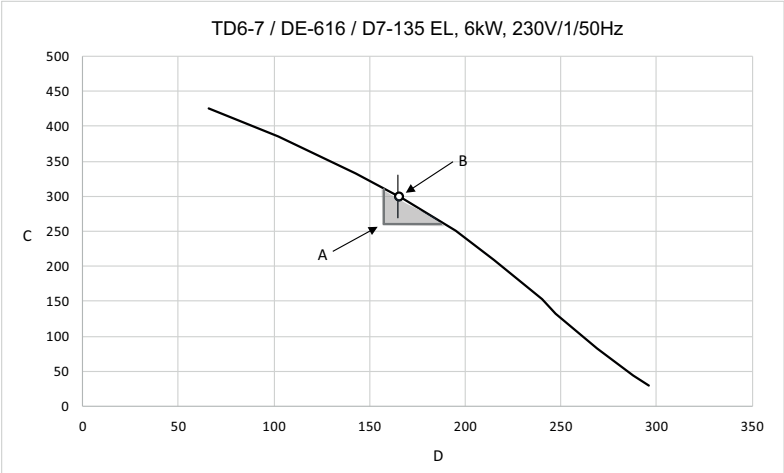

fig.X01558A

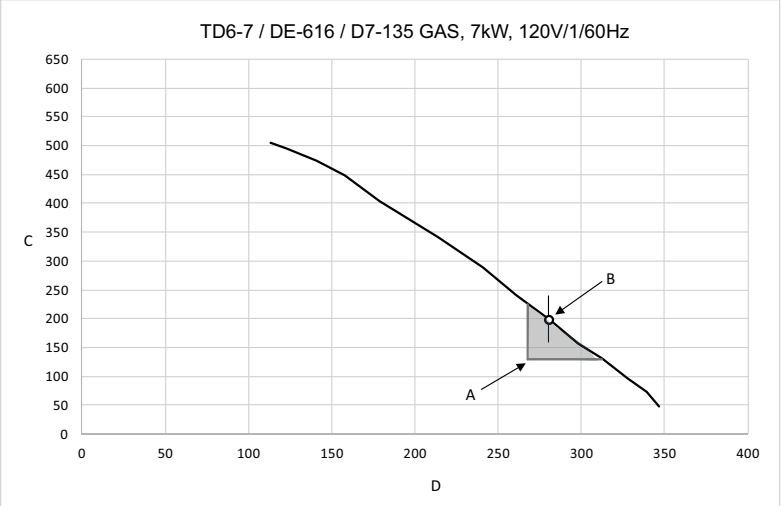

fig.X01748

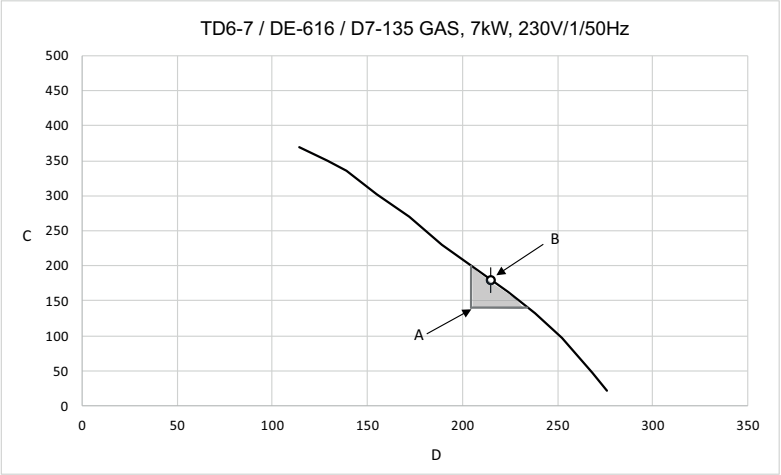

fig.X01749

Alternative measuring method

Adjusting the air flow may only be carried out by authorized personnel.

Use a home made U tube manometer, a hose (max. outer ⌀ 10 mm and min. outer ⌀ 5 mm), with water. Insert one end of the hose in the hole (A) (after the plug has been removed), hold the hose according to the picture so that the water is in level.

Start the machine and measure the difference between the water in one of the hose ends with the other.

1 mm = 10 Pa.

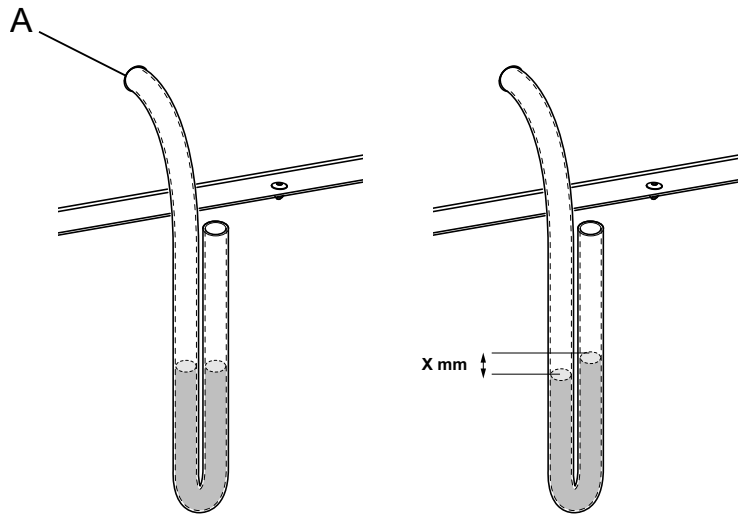

fig.7528B

Note!

When the air flow is adjusted remount the plug in the hole (A) and lock the damper in the new position.

Remount the rear panel.

6 Electrical connection

6.1 Electrical installation

The electrical installation may only be carried out by qualified personnel.

Machines with frequency-controlled motors can be incompatible with certain types of earth leakage circuit breaker. It is important to know that the machines are designed to provide a high level of personal safety, which is why items of external equipment such as earth leakage circuit breakers are not necessary but is recommended. If you still want to connect your machine across an earth leakage circuit breaker, please remember the following:

- contact a skilled, authorised installation company to ensure that the appropriate type of breaker is chosen and that the dimensioning is correct
- for maximum reliability, connect only one machine per earth leakage circuit breaker
- it is important that the earth wire is properly connected.

In instances where the machine is not equipped with an all pole switch, one must be installed beforehand.

In accordance with the wiring rules: mount a multi-pole switch prior to the machine to facilitate installation and service operations.

The connecting cable shall hang in a gentle curve.

For AU/NZ: Fixed wiring is in accordance with AS/NZS 3000.

6.2 Single-phase connection

Demount the cover panel from the supply unit. Connect the earth and other wires as shown.

1AC	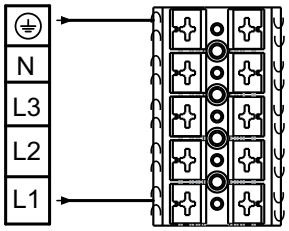
1AC	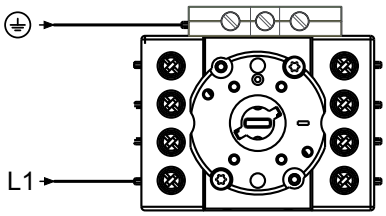
1NAC	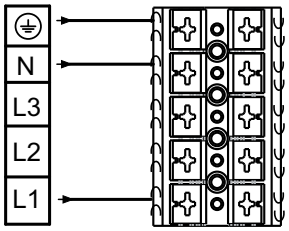
1NAC	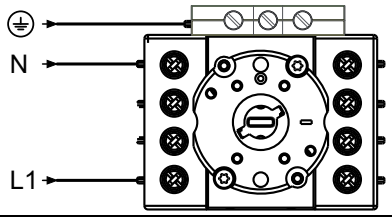

When the installation is completed remount the cover panel and check:

- That the drum is empty.
- That the machine operates by connecting the power to the machine and start a program with heat.

6.3 Three-phase connection

Demount the cover panel from the supply unit. Connect the earth and other wires as shown.

3AC	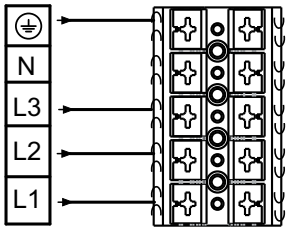
3AC	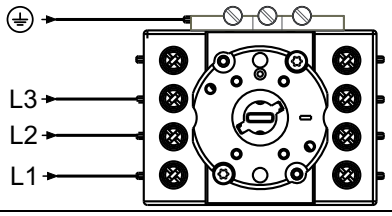
3NAC	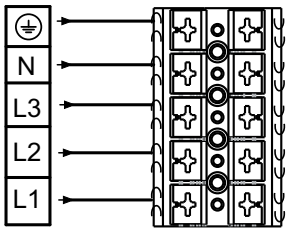
3NAC	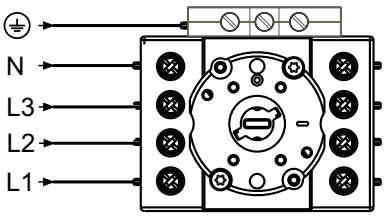

6.4 Electrical connections

Electrical connections					
Heating alternative	Main voltage	Hz	Heating power kW	Total power kW	Recommended fuse A
Electric heated machines	220–240V 1~	50/60	3.0/4.5/6.0	3.3/4.8/6.3	16/25/32
	220–230V 3~	50/60	4.5/6.0	4.8/6.3	16/20
	240V 3~	50/60	4.5/6.0	4.8/6.3	16/16
	380–400V 3~	50/60	4.5/6.0	4.8/6.3	10/10
	415/440/480V 3~	60	4.5/6.0	4.8/6.3	10/10
Gas heated machines	220–480V 1/3~	50/60	[1]	0.3	10

1. Total power and recommended fuse does not depend on the heating power in those cases.

Electrical connections					
Heating alternative	Main voltage	Hz	Heating power kW	Total power kW	Recommended fuse A
Machines with heat pump	220-240V 1/1N 3~	50/60	[1]	2.3	10
	380-415V 3N~	50/60	[1]	2.3	10

1. Total power and recommended fuse does not depend on the heating power in those cases.

6.5 Functions for I/O-cards

The electrical schematic can be one of the following:

6.5.1 Central payment (2J)

To start the machine from a central payment system, the payment system must transmit a start pulse 300–3000 ms (500 ms is recommended) with a minimum pause of 300 ms (500 ms is recommended) between two pulses. The start pulse can be either 230V or 24V. In order to receive a feedback signal once the machine has started, 230V or 24V must be connected to connection 19. The feedback signal on connection 18 remains active (high) during the entire program.

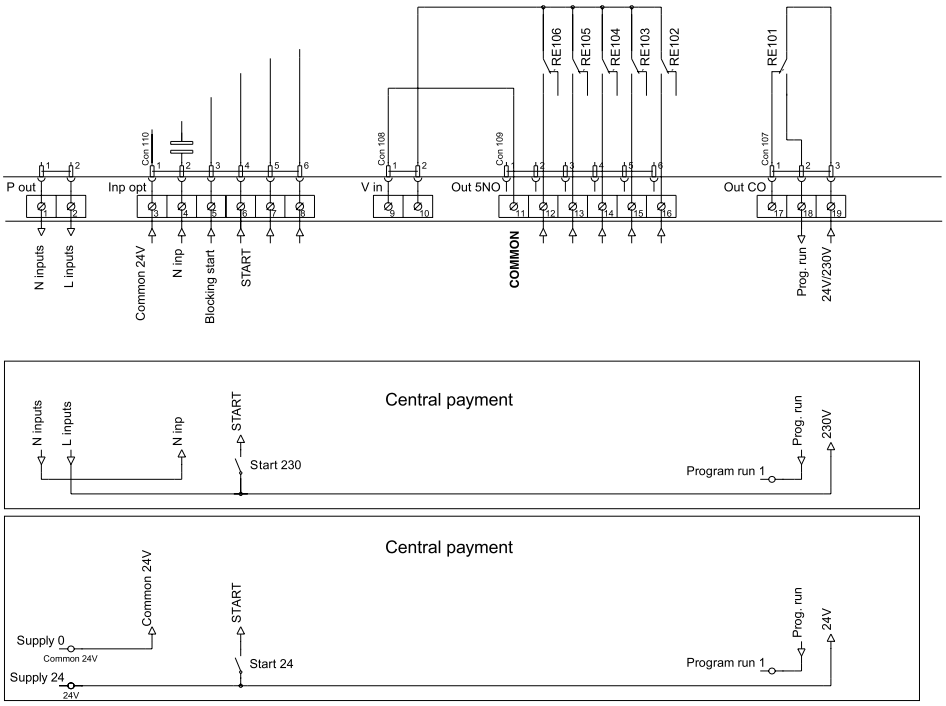

fig.7440

6.5.2 Central payment (2J)

The central payment or booking system shall transmit an active (high) signal to the machine once permission has been granted to start the machine. The signal must remain active (high) during drying. When the signal gets inactive (low) the machine will abort ongoing program and enter cooling. The signal can be either 230V or 24V. In order to receive a feedback signal once the machine has started, 230V or 24V must be connected to connection 19. The feedback signal remains active (high) during the entire program.

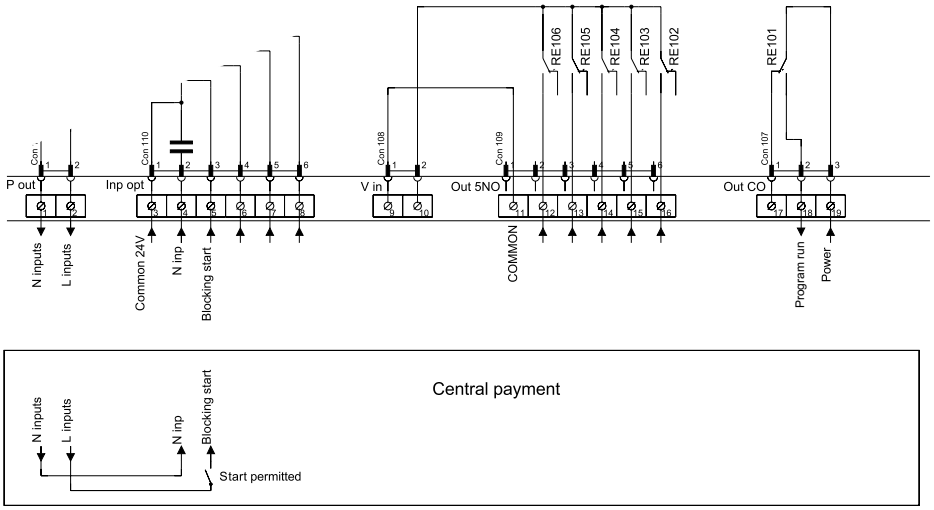

fig.7439

6.5.3 External coin meter/Central payment (2K)

The signal received from external coin meters must be a pulse between 300–3000 ms (500 ms is recommended) with a minimum pause of 300 ms (500 ms is recommended) between two pulses.

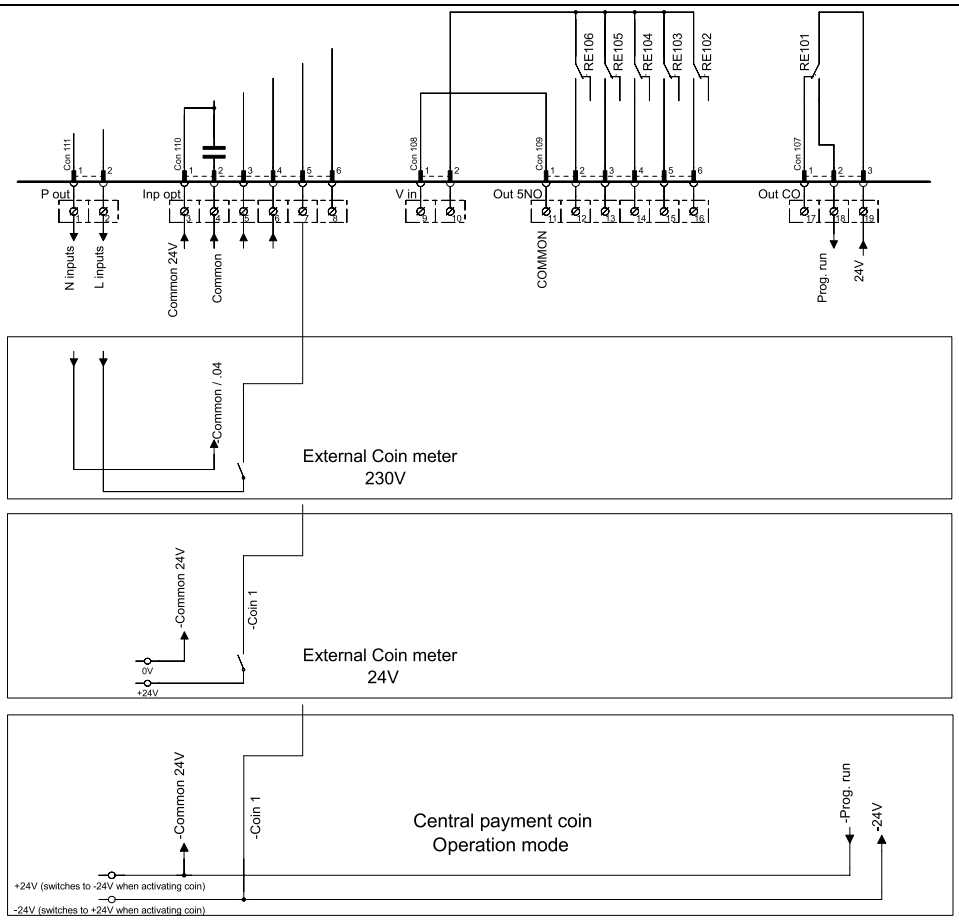

fig.7438

6.5.4 Price reduction (2K)

By maintaining an activated (high) signal on connection 5 ("Price red"), the price of the program can be reduced. This function has a number of uses, including providing reductions during a specific period of the day. Whilst the signal remains active (high), the price of the program is reduced (or the time is increased on time programs), by the percentage entered in the price programming menu.

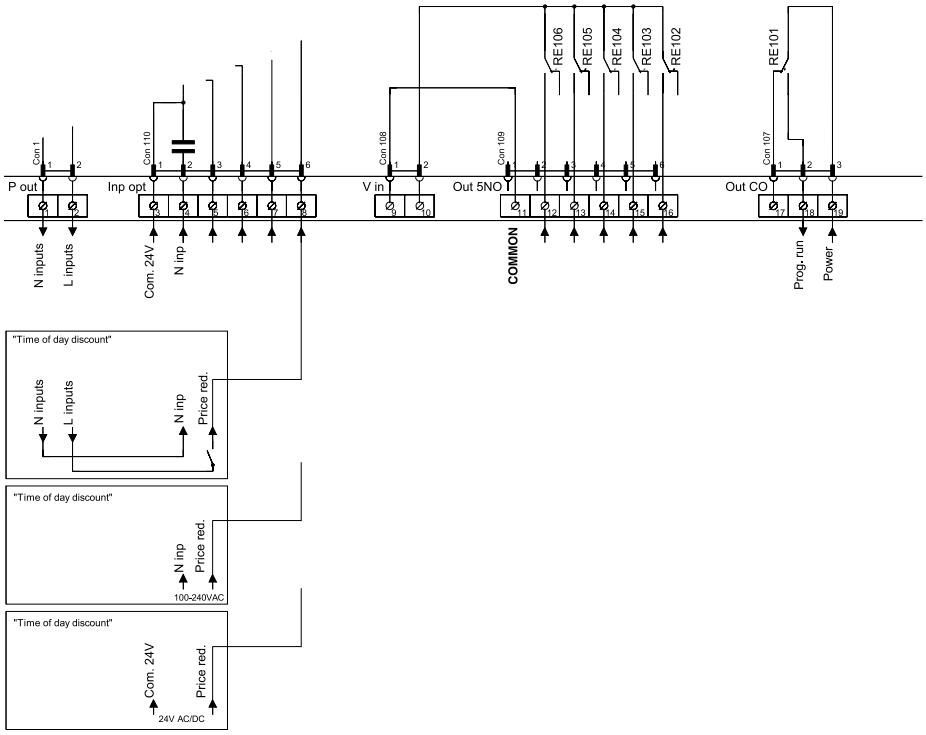

fig.7441

6.6 Option

6.6.1 External connection 100 mA

A special connection terminal is located on the connection console.

This connection can be used as external control of a fan.

The terminal for external control is equipped with 220–240V max.100 mA and is intended solely for the operation of a contactor.

Max. connection 100 mA.

Gnd. must not be used for earthing of external board.

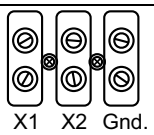

fig.7154

7 Gas connection

7.1 Fasten the label

Before installing the machine fasten the label “Read the user instructions” on the inside of the door in a suitable place and at the front panel.

The label must have the correct country code, choose the correct label from the gas kit.

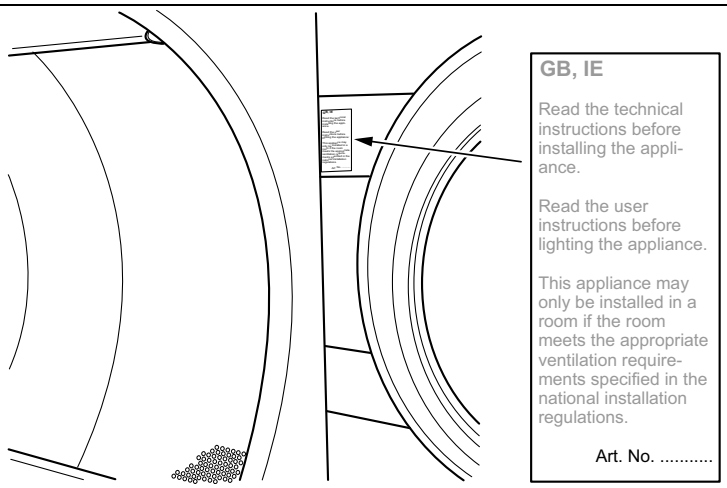

fig.7642

7.2 General

May only be carried out by qualified personnel.

Mount a shut-off valve upstream from the machine.

The factory nozzle pressure setting corresponds to the fuel value given on the data label.

Check that the nozzle pressure and fuel value correspond with the values in the gas tables on the following pages. If not, contact the supplier.

Bleed the pipe system before connecting the machine.

Note!

After connection all joints must be checked. There must not be any leaks.

7.3 Gas installation

Note!

- **The default gas appliances are built to run on natural gas (GNH) according to 2H or 2E (G20).**
- **The default gas appliance shall not be installed at an altitude above 610 m (2001 ft).**
- **To run on another gas type gas converting must be done on the machine.**
- **The gas converting accessories for other gases at altitudes below 610 m (2001 ft) are in the accessory bag.**
- **For LPG use gas qualities according to GPA Midstream Standard 2140-23.**

The data label shows the injector size and the injector pressure and the countries that use this gas quality:

AL	Albania	IE	Ireland
AT	Austria	IS	Iceland
BE	Belgium	IT	Italy
BG	Bulgaria	LT	Lithuania
CH	Switzerland	LU	Luxembourg
CY	Cyprus	LV	Latvia
CZ	Czech Republic	MK	Republic of Macedonia
DE	Germany	MT	Malta
DK	Denmark	NL	Netherlands
EE	Estonia	NO	Norway
ES	Spain	PL	Poland
FI	Finland	PT	Portugal
FR	France	RO	Romania
GB	United Kingdom	SE	Sweden
GR	Greece	SI	Slovenia
HR	Croatia	SK	Slovakia
HU	Hungary	TR	Turkey

You should check the kind of energy gas that is available in your place and check high altitude of the machine located place.

There are many gas types of the same kind but the machine should be equipped with different kinds of nozzles depending on the gas type.

For non-european countries check the heat value of the energy gas and compare it to the declared heat value of gas in the attached label.

7.4 Table of pressure and adjustment

Natural gas	Gas category	Inlet pressure (mbar)	Nozzle pressure (mbar)	Nozzle size (⌀ mm)	Air reducing/ restriction plate (mm)	Label number	May be available in following countries
	2H, 2E	20	8	2.50	No	Default	AT, BG, CH, CZ, DE, DK, EE, ES, FI, GB, GR, HR, HU, IS, IE, IT, LT, LU, LV, NO, PL, PT, RO, SE, SI, SK, TR
	2E+	20 / 25	No regulation	2.00	No	490375691	BE, FR
	2E (G20)	20	8	2.50	No	490375692	NL
	2L (G25)	25	12				
	2(43.46-45.3 MJ/m3 (0 °C)) (G25.3)	25	12				
	2LL (G25)	20	12	2.50	No	490375692	DE

Liquid petroleum gas (LPG)	Gas category	Inlet pressure (mbar)	Nozzle pressure (mbar)	Nozzle size (⌀ mm)	Air reducing/ restriction plate (mm)	Label number	May be available in following countries
BP mixtures according to GPA Midstream Standard 2140-23	3+	28-30 / 37	No regulation	1.35	No	490375693	BE, CH, CY, CZ, ES, FR, GB, GR, IE, IT, LT, LU, LV, PT, SK, SI
Commercial Butane according to GPA Midstream Standard 2140-23	3B/P	30, 37, 50	28	1.35	No	490375694	AT, BE, BG, CH, CY, DE, DK, EE, FI, FR, GB, HR, HU, IS, IT, LT, LU, MT, NL, NO, PL, RO, SE, SI, SK, TR
Propane HD-5 according to GPA Midstream Standard 2140-23	3P	30, 37, 50	28	1.45	No	490375695	AT, BE, CH, CZ, DE, ES, FI, FR, GB, GR, HR, IE, IT, LT, LU, NL, PL, PT, RO, SI, SK

Town gas	Gas category	Inlet pressure (mbar)	Nozzle pressure (mbar)	Nozzle size (⌀ mm)	Air reducing/ restriction plate (mm)	Label number	May be available in following countries
	1a	8	4.5	4.10	487042239 A	Default	DK, IT
	1b	8	3.5	4.10	487042239 A	490376107	SE

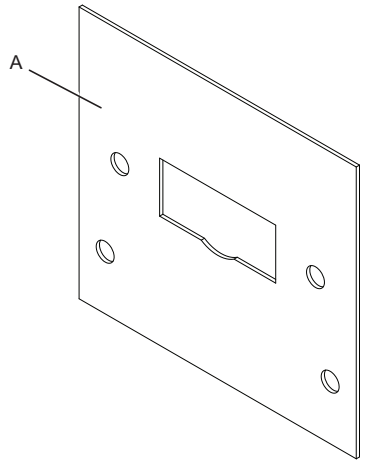

fig.X02722

Note!

- **The default gas appliances are built to run on natural gas (GNH) according to 2H or 2E (G20).**
- **The default gas appliance shall not be installed at an altitude above 610 m (2001 ft).**
- **To run on another gas type gas converting must be done on the machine.**
- **The gas converting accessories for other gases at altitudes below 610 m (2001 ft) are in the accessory bag.**
- **For LPG use gas qualities according to GPA Midstream Standard 2140-23.**

7.5 Test run

Note!

Before test run the machine, ensure that the air flow/static back pressure has been adjusted accorded to the "Evacuation system" section. Adjust the air flow if necessary.

- Loosen the measuring branch screw (2) 1/4 turn; connect a manometer to the measuring branch and make sure the connection is tight to prevent air leakage.
- Connect the power to the machine and select a program with heat.
- Start the machine.
- Check that the nozzle pressure is correct according to the gas type, see "Table of pressure and adjustment".
- If the nozzle pressure should be adjusted:
  - Demount the cover screw (3).
  - Turn the screw (4). Clockwise: increasing nozzle pressure.
  - Turn the screw (4). Counter Clockwise: decreasing nozzle pressure.
- Check that the gas is burning evenly. The blue flame on the burner is preferred.

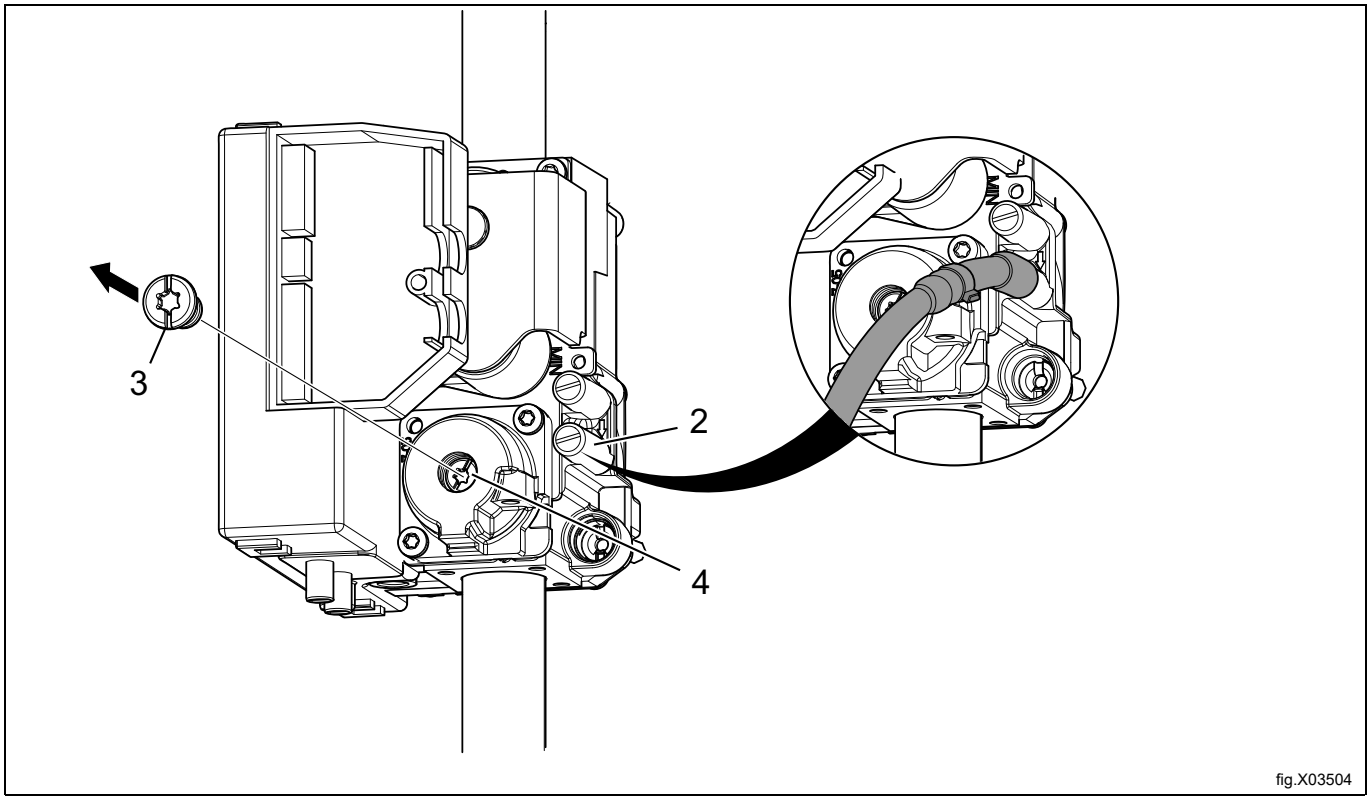

- Remount the cover screw (3).
- Remove the manometer and tighten the screw (2) when the adjustments are done.

Note!

After connection all joints must be checked. There must not be any leaks.

7.6 Converting instructions

- Disconnect the power to the machine.
- Demount the back panel.
- Remove the nozzle (1).
- Mount the new supplied nozzle.

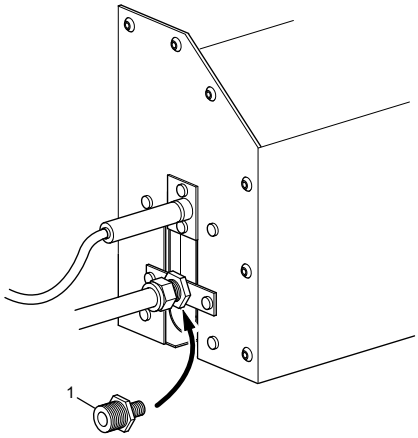

fig.7506A

- Loosen the measuring branch screw (2) 1/4 turn; connect a manometer to the measuring branch and make sure the connection is tight to prevent air leakage.
- Ensure that the air flow/static back pressure has been adjusted accorded to the "Evacuation system" section. Adjust the air flow if necessary.
- Connect the power to the machine and select a program with heat.
- Start the machine.
- Check that the nozzle pressure is correct according to the gas type, see "Table of pressure and adjustment".
- If the nozzle pressure should be adjusted:
  - Demount the cover screw (3).
  - Turn the screw (4). Clockwise: increasing nozzle pressure.
  - Turn the screw (4). Counter Clockwise: decreasing nozzle pressure.

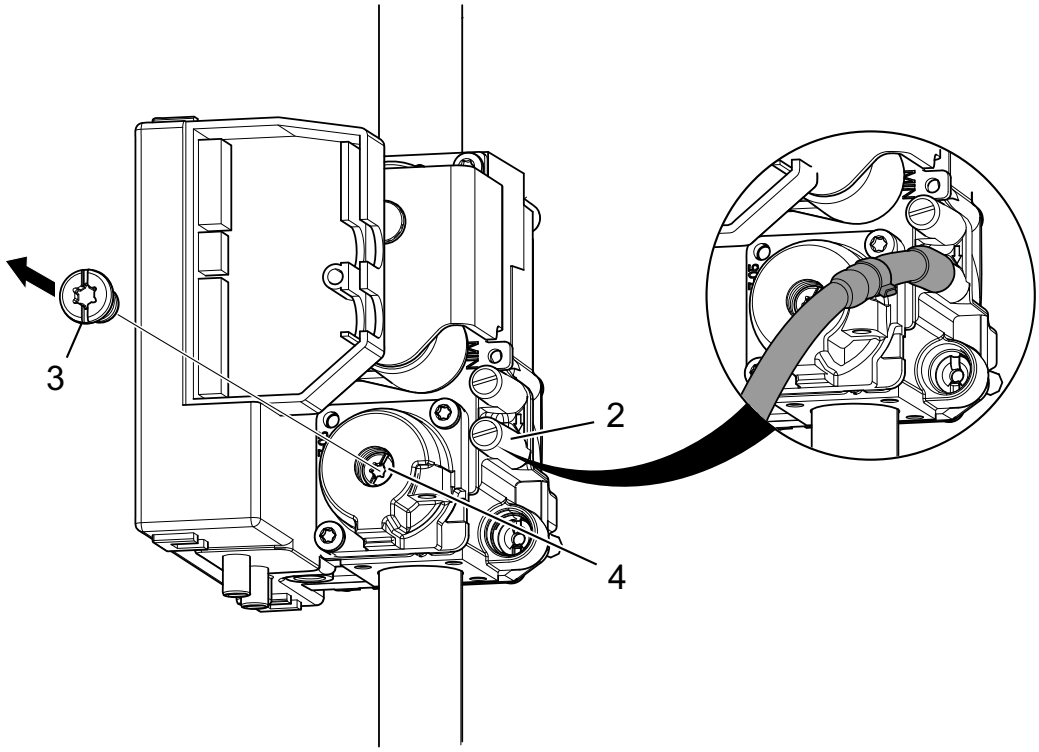

fig.X03504

- Check that the gas flame burns evenly.
- Mount the cover screw (3).
- Remove the manometer and tighten the screw (2) when the adjustments are done.
- Remount the rear panel.
- Put the correct gas label on the data plate, see "Data label" section.

Note!

After connection all joints must be checked. There must not be any leaks.

7.7 Data label

When the machine is to be converted to another gas type, the data label at the rear of the machine must be updated in order for the data to be correct.

Place the data label enclosed in the conversion kit on top of the data label as shown below. If there are more than one data label, select the label with the correct country code and gas type.

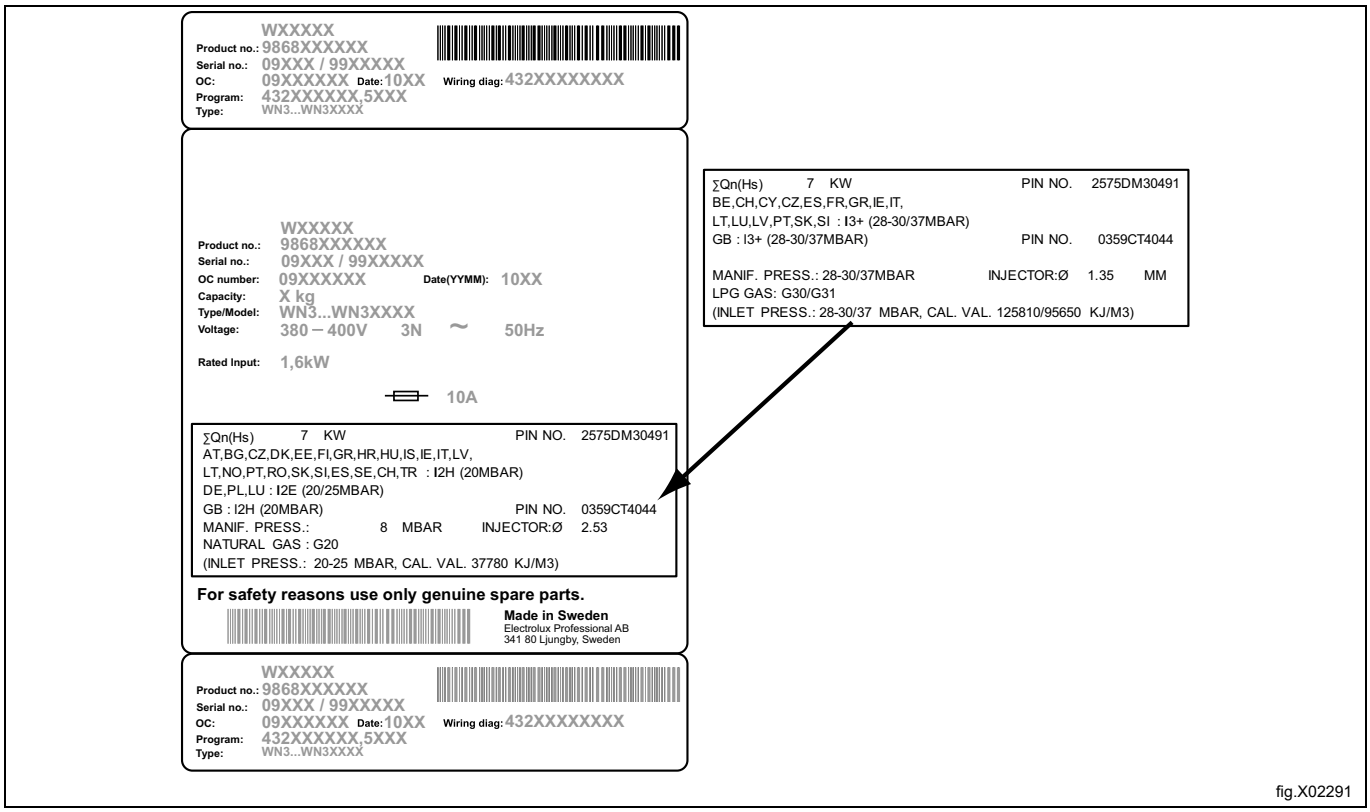

fig.X02291

8 Reversing the door

Disconnect the power to the machine.
Demount the hinges and remove the door. Remove the upper hinge first.

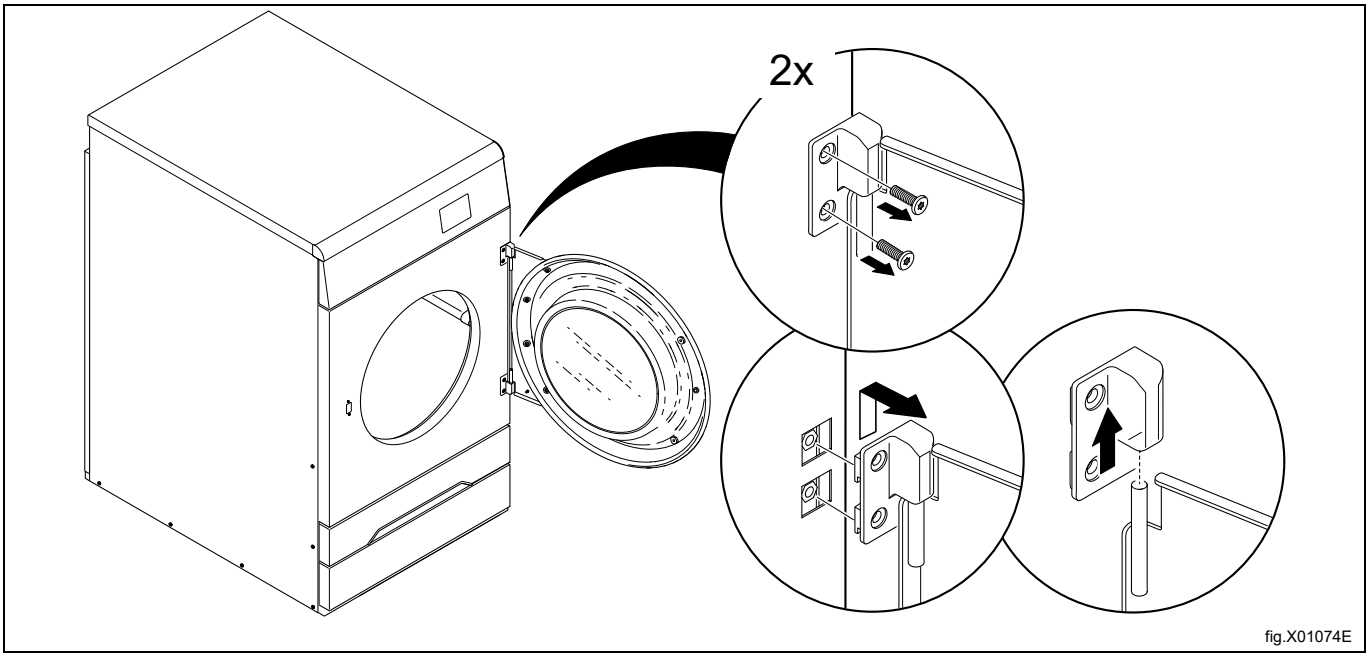

fig.X01074E

Remove the filter drawer from the machine.

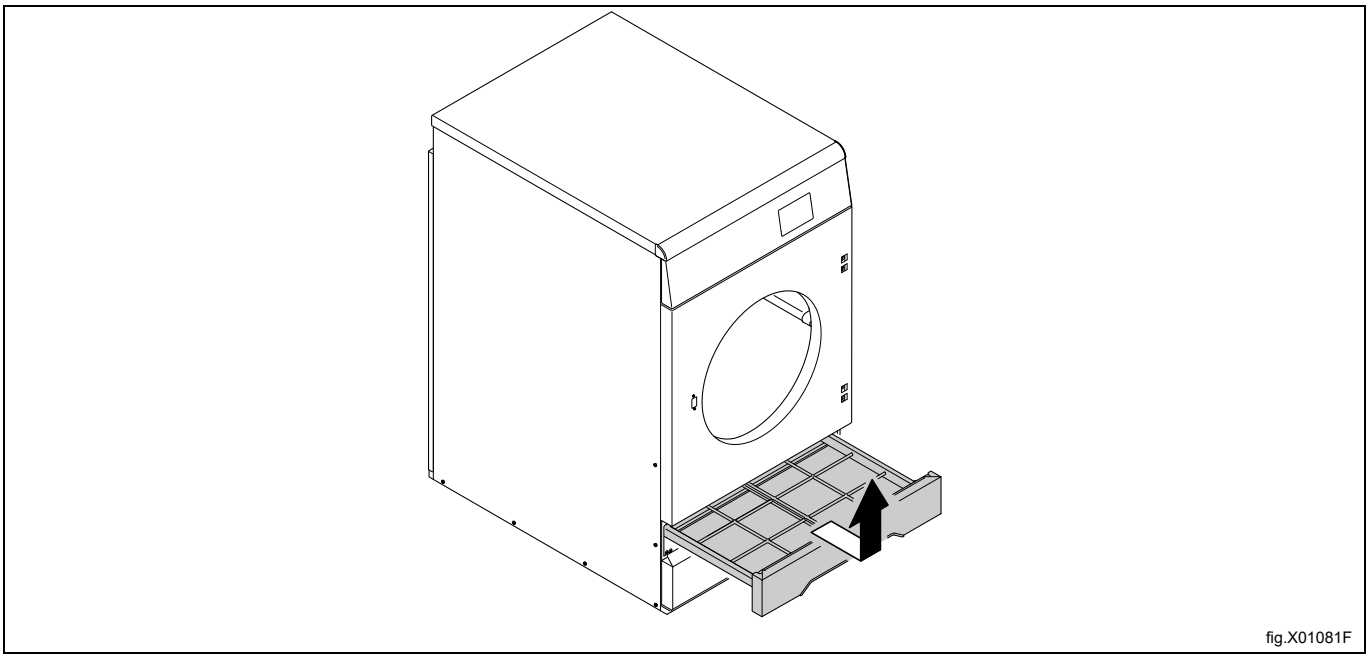
fig.X01081F

Demount the front panel.

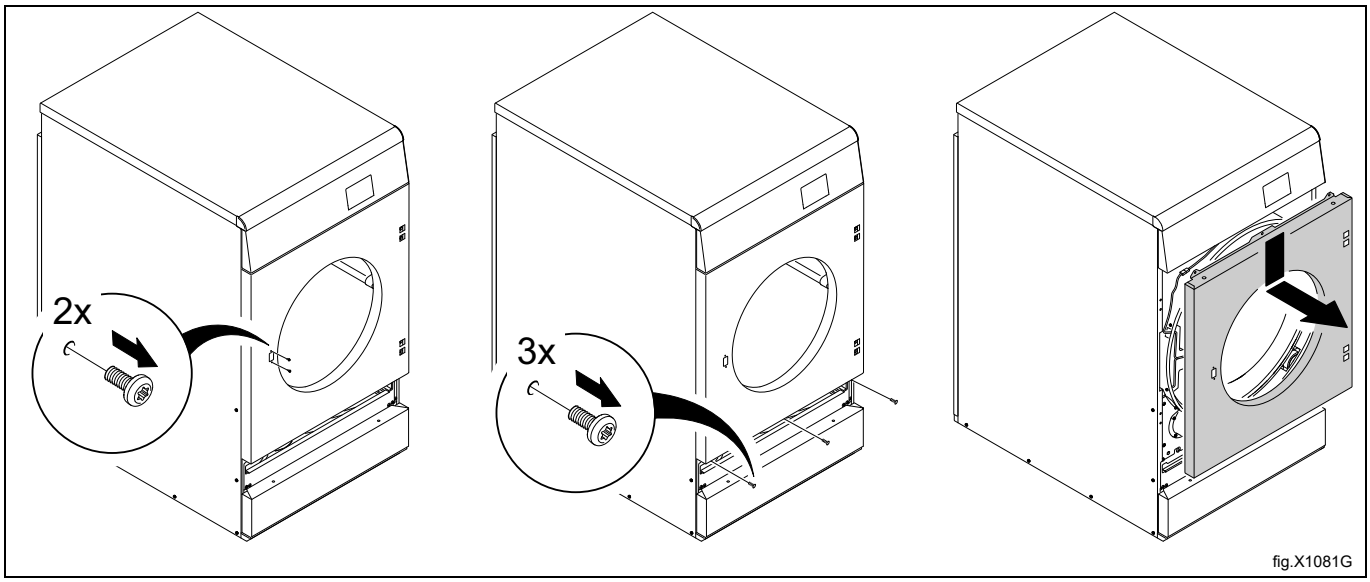

Disconnect the door switch cable.

Remove the upper screw, the cover and the lower screw on the right side.

Remove the screws on the left side to release the reed switch bracket holding the door switch cable. Pull the door switch cable through the hole to release it.

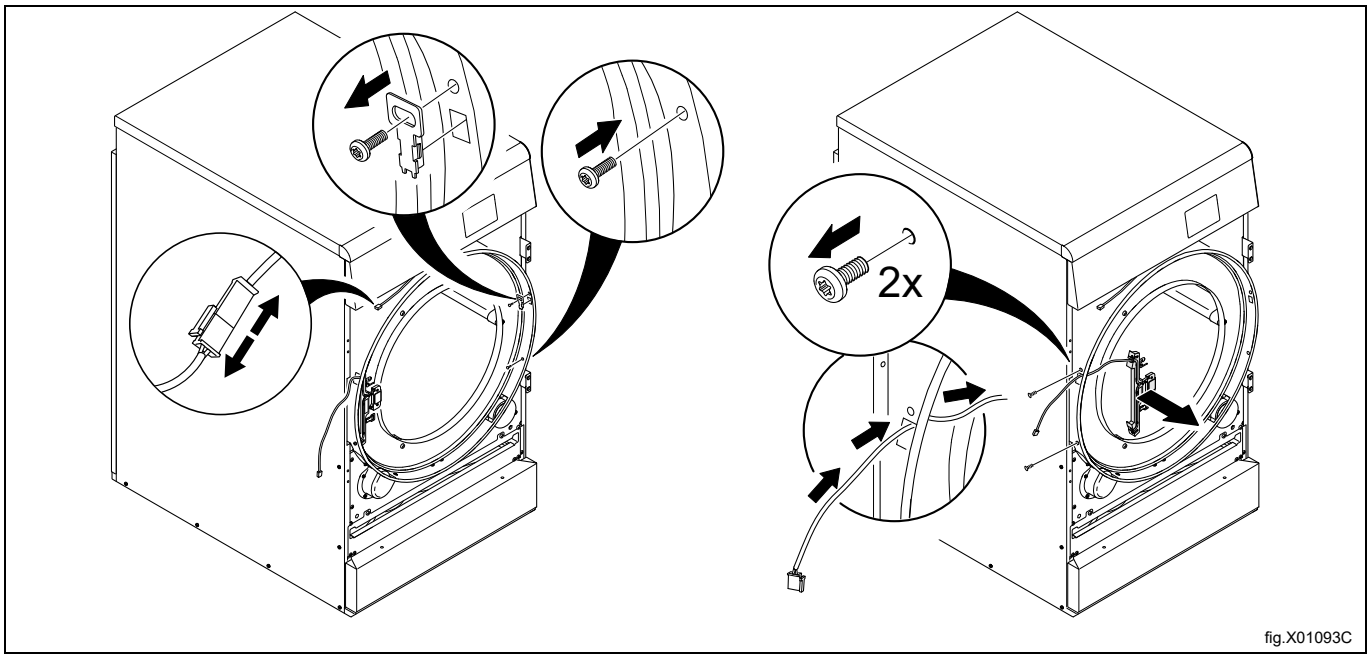

Demount the brackets and fasten them on the opposite side. Make sure to fasten them according to the figure.

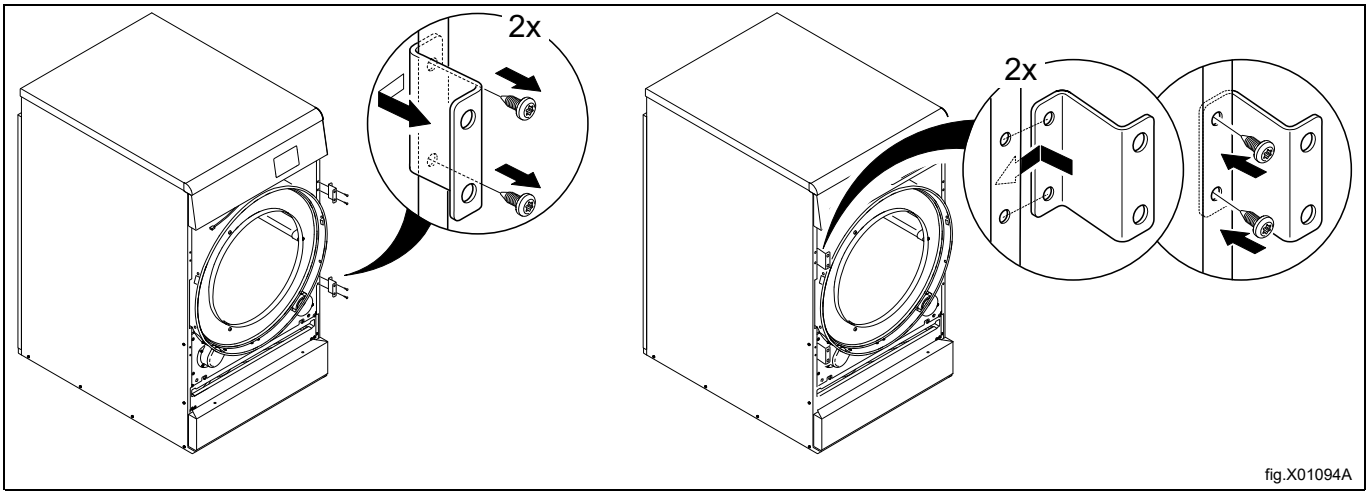

fig.X01094A

On the reed switch bracket, pull out and move the door switch cable from the upper to the lower position according to the figure. Make sure that the cable and the end piece are in position.

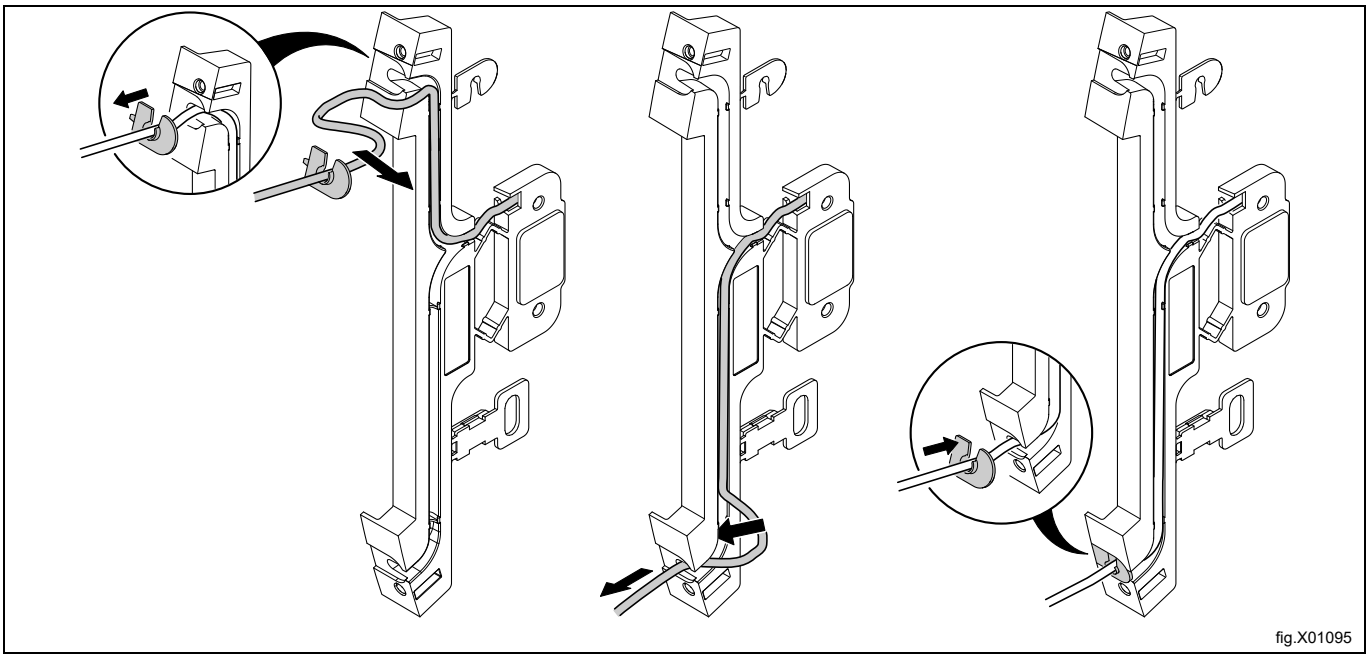
fig.X01095

Turn the reed switch bracket up side down and mount it on the right side. Pull the door switch cable out through the hole and connect it.

Fasten the reed switch bracket with the screws on the right side.

Remount the cover and fasten the upper and lower screw on the left side.

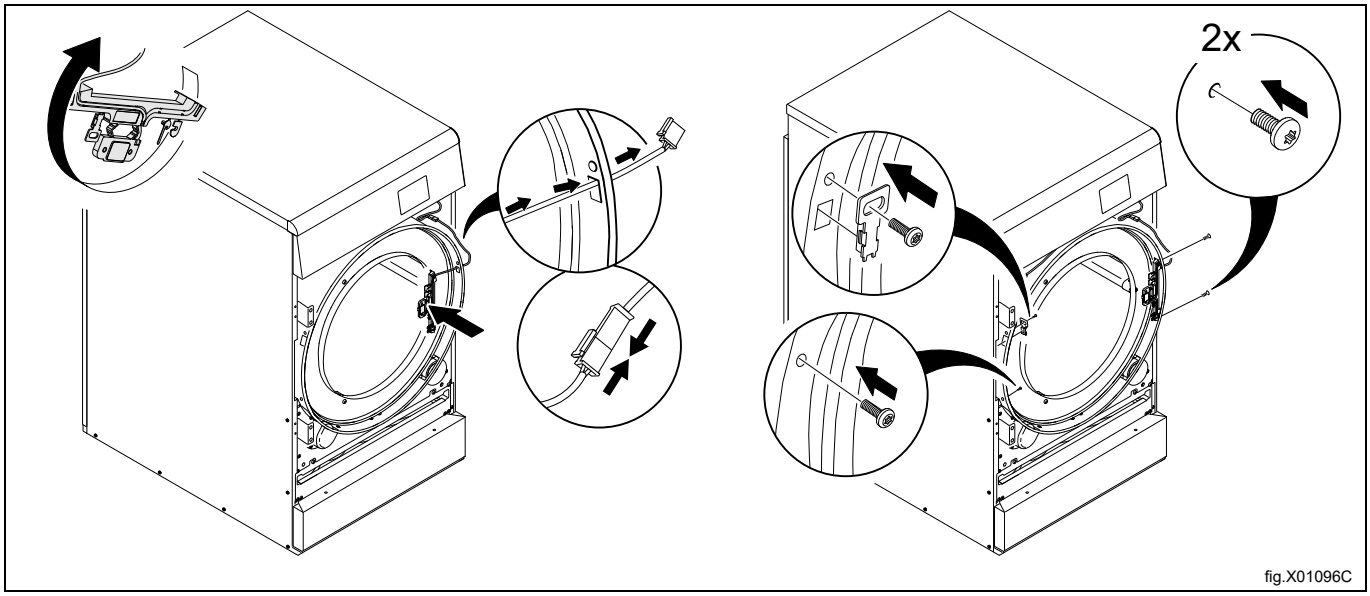

fig.X01096C

Turn the front panel up side down and remount it on the machine.

Ensure that the door switch cable does not get damaged when remounting the front panel.

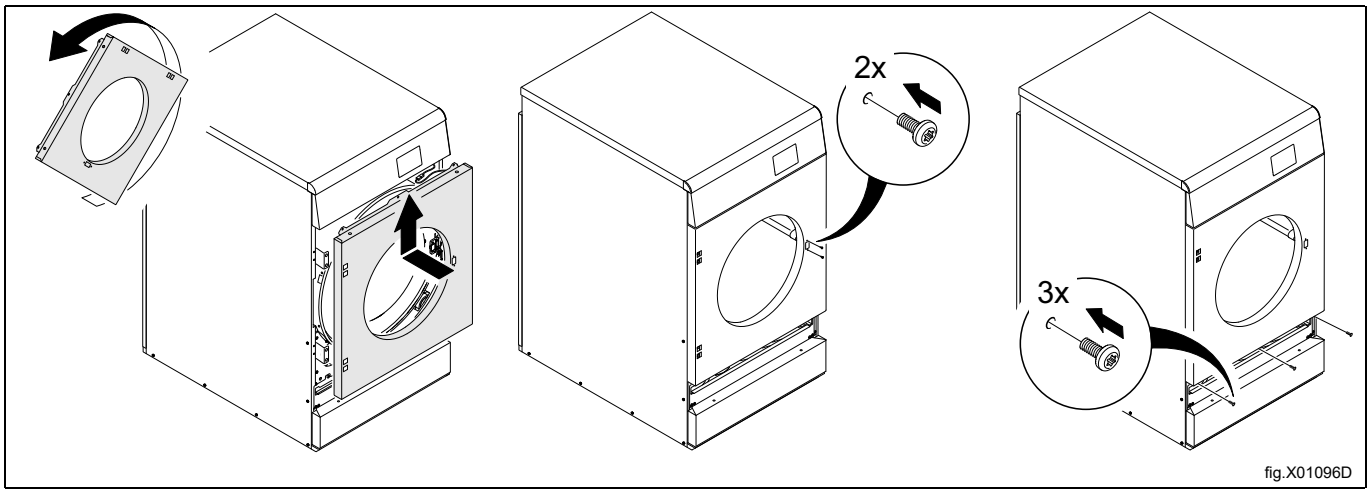

fig.X01096D

Insert the filter drawer.

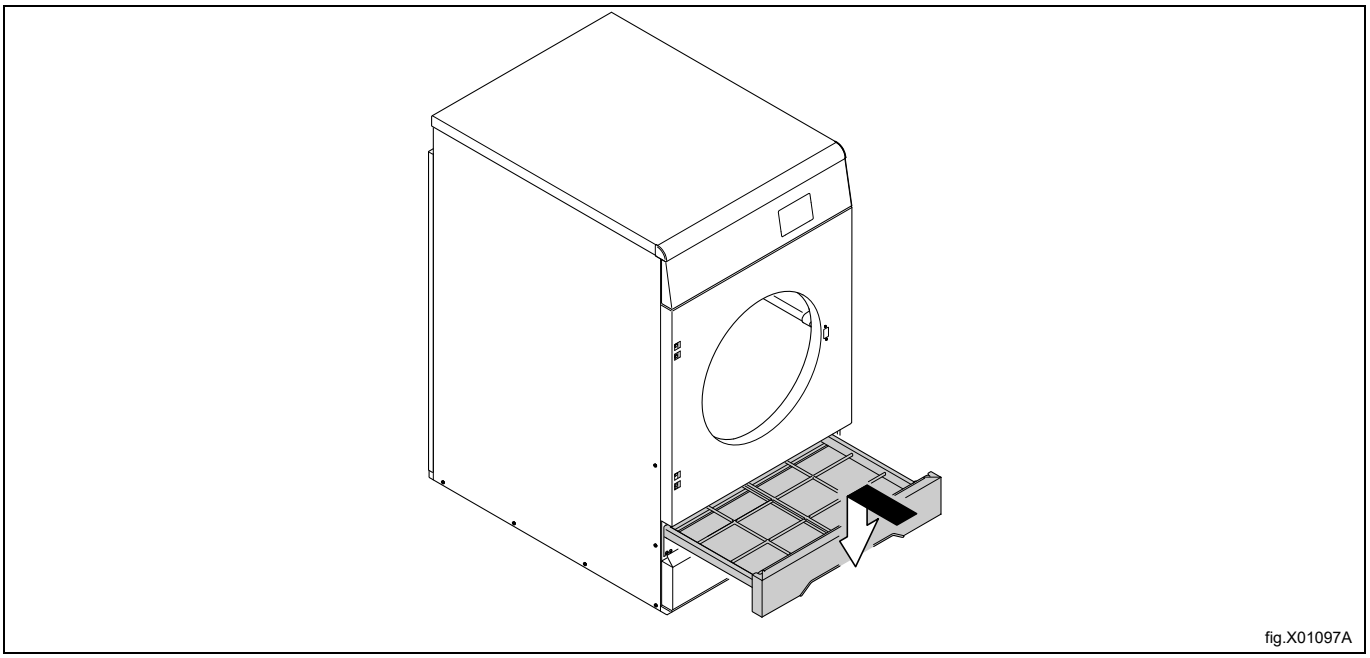

Turn the door up side down with the inside facing towards you.
Remount the lower hinge first.
Position the door on the lower hinge.

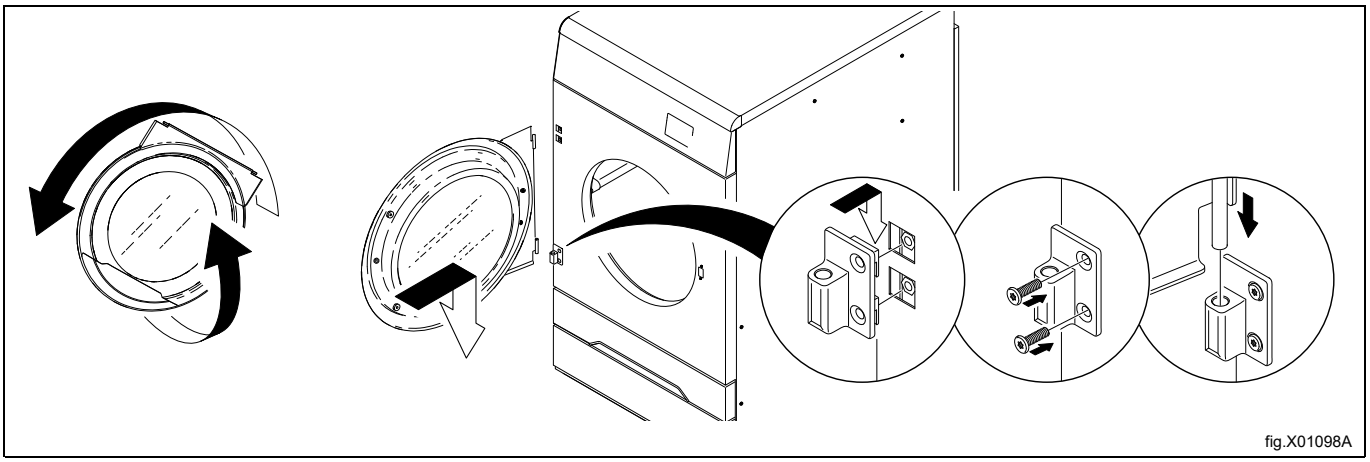

Put the upper hinge on the door and then fasten the hinge while it is on the door.

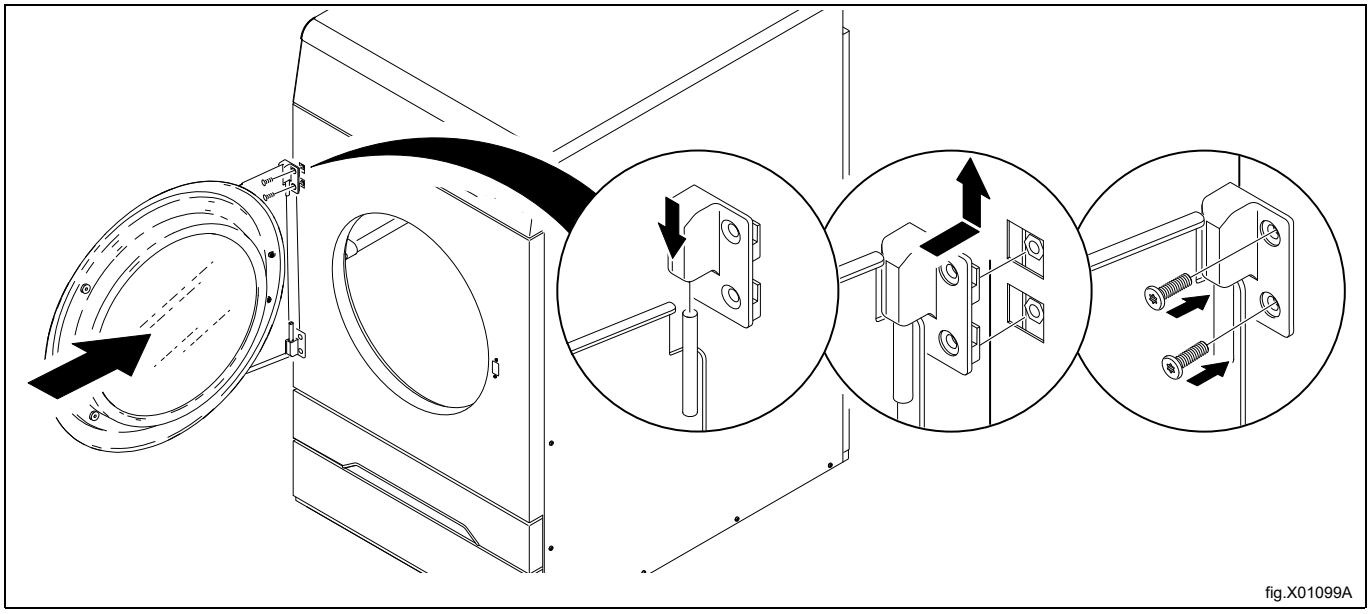

Connect the power to the machine.
Test run the machine.

9 At first power up

When the installation is complete and the power is connected for the first time you will be forced to make the following settings. When one setting is ready you will automatically enter the next one. Follow the instructions on the display.

- Select language
- Set time and date
- Activate/deactivate the service alarm

9.1 Select language

Select language from the list on the display. Scroll with the up- and down arrows.

This will be the language that all display messages, program names etc will be presented in.

9.2 Set time and date

Select `YES` and press ▶II to get to the `TIME/DATE` menu.

Activate the `SET TIME` menu and set the correct time.

Save the settings.

Activate the `SET DATE` menu and set the correct date. Start by setting the year.

- Set the year. Exit to continue with a long press on ▶II .
- Set the month. Exit to continue with a long press on ▶II .
- Set the day. Exit with a long press on ▶II and then save with a long press on ▶II .

Exit the menu when ready.

9.3 Activate/Deactivate the service alarm

Set if the machine shall give a service alarm or not with `YES` or `NO`.

Exit and save the settings.

10 Function check

⚠ ⚠

May only be carried out by qualified personnel.

A function check must be made when the installation is finished and before the machine can be ready to be used.

Whenever a repair has been made, a function check must be performed before the machine can be used again.

Check the automatic stop of the machine

- Start the machine.
- Check if the micro switches are working properly:
  The machine must stop if the door is opened.

Check the direction of rotation (only on machines with 3–phase power supply, marine installation)

Demount the top panel and start a program. Check that the drum rotation is clockwise.

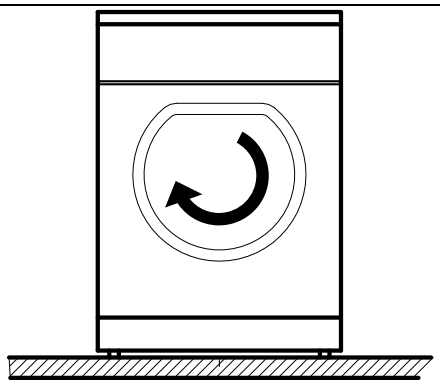

fig.W00200

If the direction is wrong, swap two of the three phases to the left on the connection terminal.

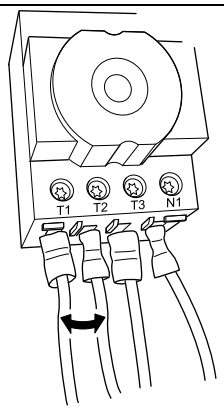

fig.7119

Check the heat

- Let the machine work for five minutes on a program with heat.
- Check that the heating is working by opening the door and feel if there is heat in the drum.

During a drying cycle, when the square in the lower right corner is fully ticked, it indicates that the heating unit is active / ON. The heating unit can be gas, electric, steam or heat pump type.

If the square box is not ticked, it doesn't mean the heating unit is abnormal. This box is just monitoring the status of the heating unit and shows if it is Active / ON or Inactive / OFF.

- A = Active / ON
- B = Inactive / OFF

fig.X01995

Ready to use

If all tests are OK the machine is now ready to be used.

If some of the tests failed, or deficiencies or errors are detected, please contact your local service organisation or dealer.

11 Disposal information

11.1 Appliance recyclability and disposal

11.1.1 Recyclability

Our appliances are manufactured using a significant percentage of recyclable metals (such as stainless steel, iron, aluminium, galvanized sheet, copper, etc.), which can be recovered through the local recycling systems, in compliance with the regulations in force in the country of use.

National regulations regarding waste disposal may vary. Disposal of the appliance must therefore be carried out in accordance with the applicable legislation and the directives issued by the competent authorities in the country where the appliance is decommissioned.

The components of the appliance must be separated and disposed of in accordance with their material composition (e.g. metals, oils, greases, plastics, rubber, refrigerant gases, insulating boards and other insulating material, glass wool, LEDs, etc.) and in full compliance with applicable local and international waste management regulations.

Compressors may contain oils and refrigerants fluids - are special waste and has to be recycled on local bases regulations.

11.1.2 Procedure regarding appliance disposal and component / material recovery

This product should not simply be disposed of in the environment at the end of its life cycle; it is imperative instead either to dispose of it in accordance with local environmental regulations, or, preferably, to deliver it whole to an authorized recycling center.

All removed components, including doors and other structural parts, must be delivered together with the appliance to an authorized recycling or dismantling facility.

The dismantling/recycling center will apply state of the art technologies and methods available to them to effectively disassemble the products for best recyclability.

Note that printed circuit boards, electrical motors or other components identified in European Union legislation to be of high critical raw materials recovery potential need to be addressed specifically.

In case of doubts or questions, always refer to your reference customer care service.

Before disposing of the appliance, carefully inspect its physical condition and preservation state, checking for potential leaks of liquids or gases, as well as for broken parts that may pose hazards during handling and subsequent dismantling.

	The symbol on the product indicates that this product should not be treated as domestic waste, but must be correctly disposed of in order to prevent any negative consequences for the environment and human health. For further information on the recycling of this product, contact the local dealer or agent, the customer care service or the local body responsible for waste disposal.

Note!
When dismantling the appliance, any marking, this manual and other documents concerning the appliance must be destroyed.

11.2 Disposal of packing

The packing must be disposed of in compliance with the current regulations in the country where the appliance is used. All the packing materials are environmentally friendly.

They can be safely kept, recycled or burned in an appropriate waste incineration plant. Recyclable plastic parts are marked as following examples.

PE	Polyethylene: • Outer wrapping • Instructions bag
PP	Polypropylene: • Straps
PS	Polystyrene foam: • Corner protectors

Electrolux Professional AB
341 80 Ljungby, Sweden

Share more of our thinking at www.wascomat.com